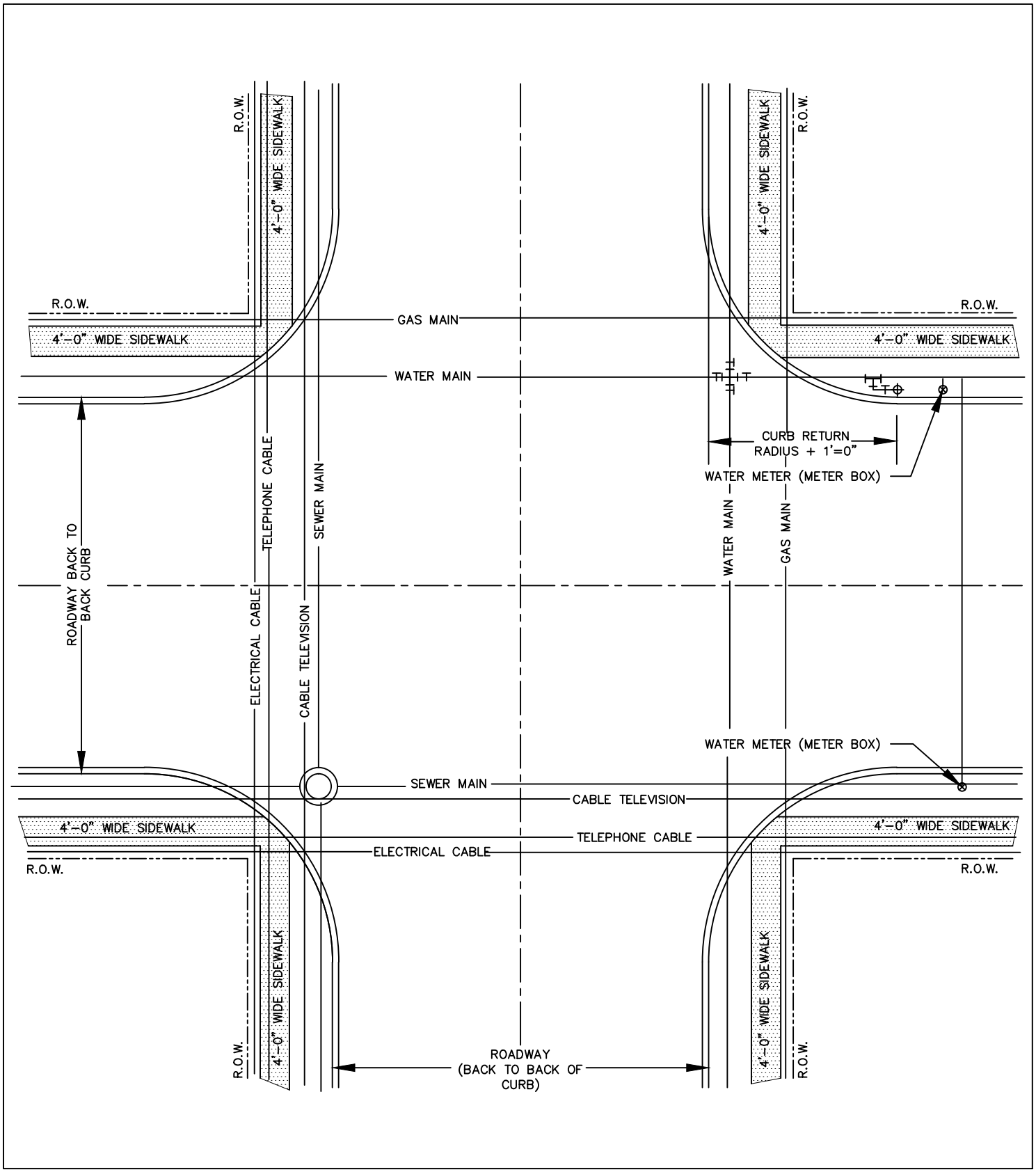

GENERAL DESIGN STANDARDS
UTILITY LOCATION DETAILS

SCALE: NTS DATE: 01/2004

SHEET 1 OF 4

CARROLLTON
TEXAS

UTILITY LOCATION PLAN

U-1

ENGINEERING
DEPARTMENT

FILENAME: U-1_1-4.DWG

1945 E. JACKSON ROAD CARROLLTON, TEXAS 75006 WWW.CITYOFCARROLLTON.COM (972)466-3200

SEE STANDARD DETAIL FOR MATERIALS LIST AND DEPTHS.
WATER SERVICE INSTALLATION IS TYPICAL FOR ALL CONDITIONS.

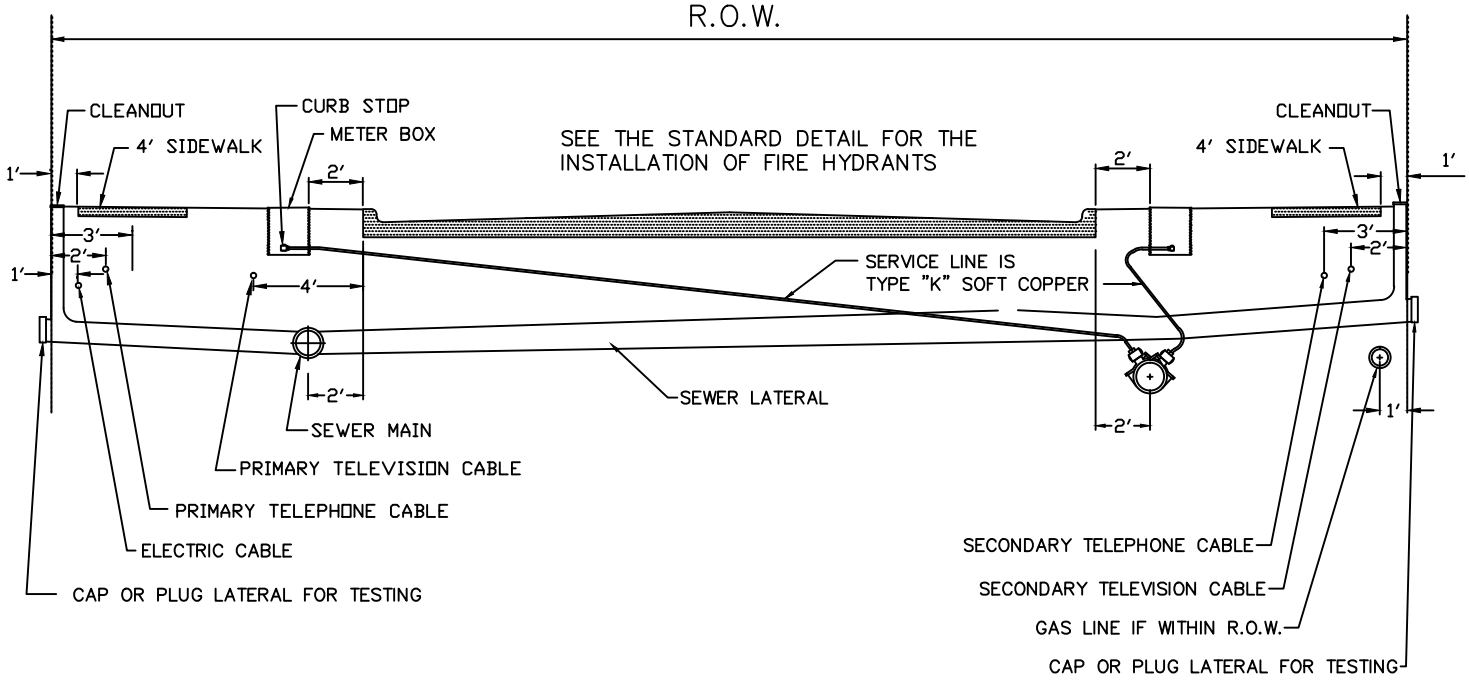

TYPICAL UTILITY SERVICE LOCATIONS FROM STREET

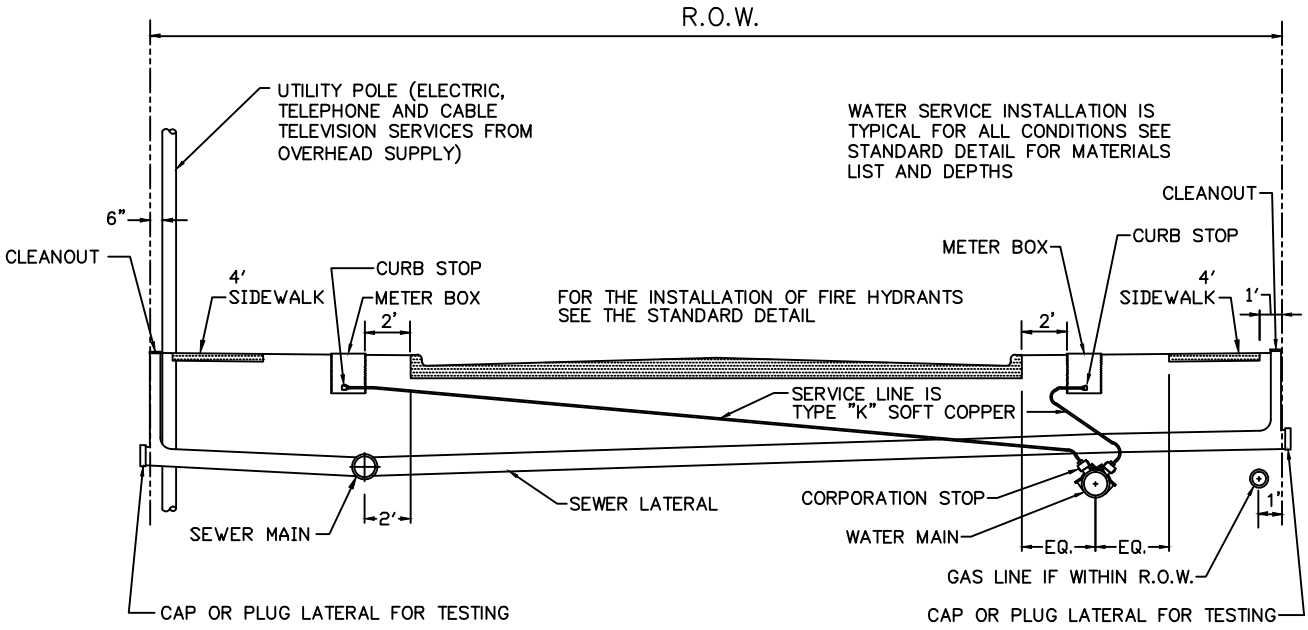

UTILITY SERVICE LOCATIONS FROM STREET AND OVERHEAD

CARROLLTON TEXAS

GENERAL DESIGN STANDARDS
UTILITY LOCATION DETAILS

UTILITY LOCATION PROFILE

SCALE: NTS DATE: 01/2004
SHEET 2 OF 4

U-1

ENGINEERING DEPARTMENT

FILENAME: U-1_1-4.DWG

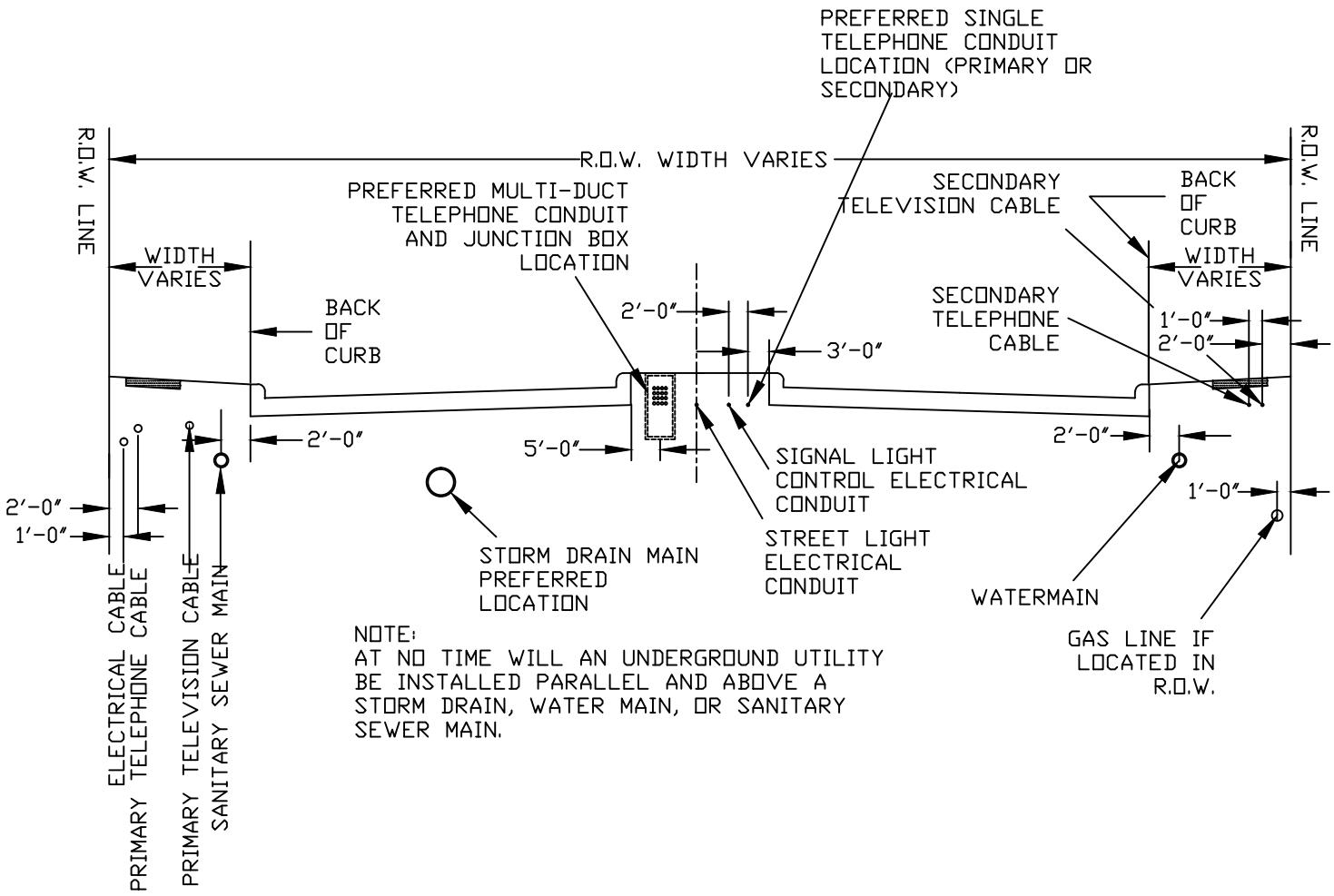

NOTE:
AT NO TIME WILL AN UNDERGROUND UTILITY BE INSTALLED PARALLEL AND ABOVE A STORM DRAIN, WATER MAIN, OR SANITARY SEWER MAIN.

TYPICAL UTILITY LOCATIONS MAJOR ARTERIAL AND/OR COLLECTOR STREET WITH MEDIAN DIVIDERS

N.T.S.

GENERAL DESIGN STANDARDS
UTILITY LOCATION DETAILS

UTILITY LOCATION PROFILE

SCALE: NTS DATE: 01/2005
SHEET 3 OF 4

CARROLLTON TEXAS

U-1

ENGINEERING DEPARTMENT

FILENAME: U-1_3-4.DWG

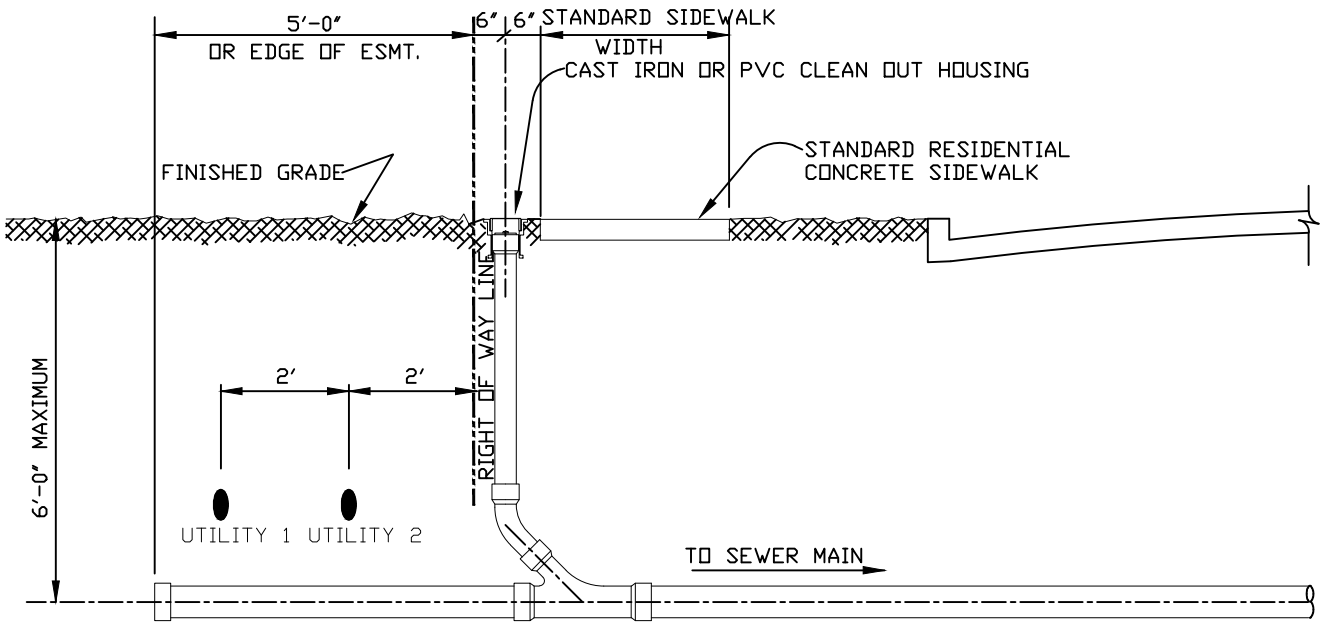

PROFILE
N.T.S.

NOTE:
GAS AND ELECTRIC SHALL BE LOCATED ON NORTH OR EAST SIDE
OF THE STREET AND CABLE TV AND TELEPHONE SHALL BE ON
SOUTH OR WEST SIDE.

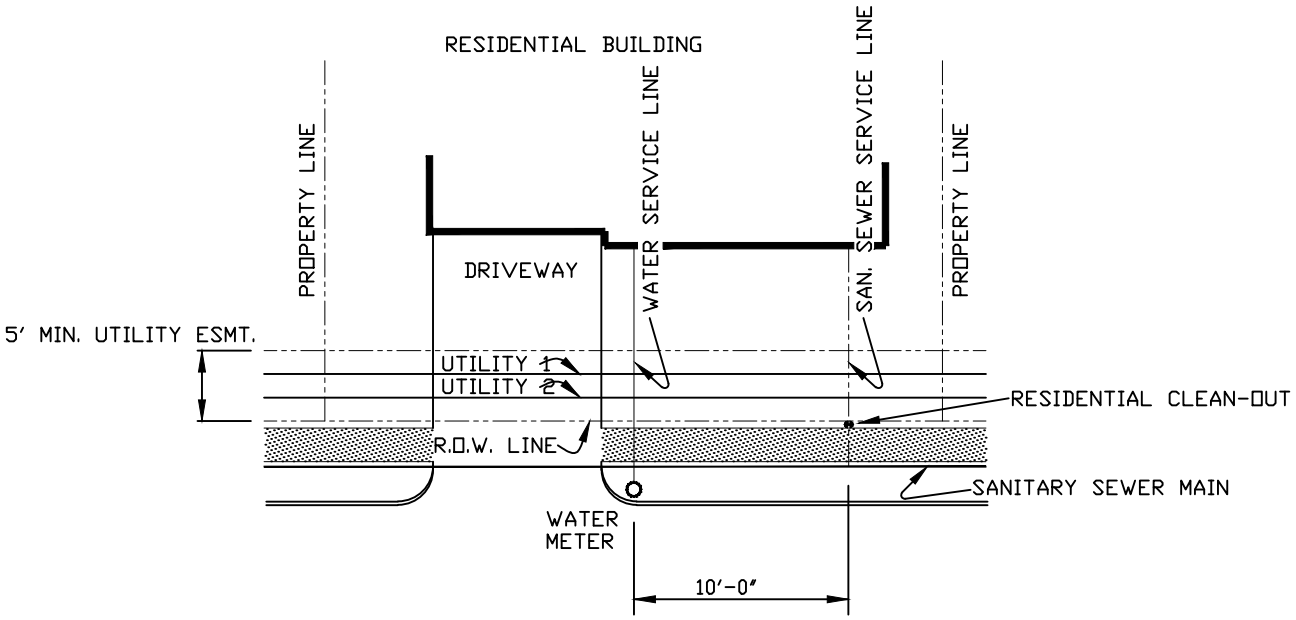

PLAN
N.T.S.

GENERAL DESIGN STANDARDS
UTILITY LOCATION DETAILS

SCALE: NTS DATE: 01/2004
SHEET 4 OF 4

CARROLLTON
TEXAS

TYPICAL UTILITY LOCATIONS
FOR RESIDENTIAL STREETS WITHOUT ALLEY

U-1

ENGINEERING
DEPARTMENT

FILENAME: U-1_4-4.DWG

GENERAL NOTES: FOR STREETS AND ALLEYS

1. GAS COMPANY MAIN SHALL BE BURIED AT A DEPTH AS SHOWN ON DRAWINGS AS APPROVED BY THE ENGINEERING DEPARTMENT. LATERALS TO INDIVIDUAL RESIDENCES SHALL EXTEND A MINIMUM OF 1'–6" BEYOND THE R.O.W. OR PROPERTY LINE.
2. CABLE TELEVISION MAINS PARALLEL TO PAVING SHALL BE BURIED AT A MINIMUM DEPTH OF 12" BELOW FINISHED GRADE. WHERE CABLE MAINS ARE BURIED UNDER PAVING, THEY SHALL MAINTAIN A MINIMUM DEPTH OF 2'–0". INDIVIDUAL SERVICES SHALL BE INSTALLED AS DETAILED ON THIS DRAWING. JUNCTION BOXES ARE TO BE INSTALLED AS REQUIRED AND SHALL PROVIDE A MINIMUM CLEARANCE OF 2'–6" FROM EDGE OF PAVEMENT. WHERE OVERHEAD JUNCTION BOXES OR OTHER ELECTRICAL APPURTENANCES ARE REQUIRED, A MINIMUM CLEARANCE OF 3'–0" FROM EDGE OF PAVEMENT OR FIRE LANE SHALL BE MAINTAINED.
3. WHERE THE ELECTRICAL SUPPLY IS TO BE AN UNDERGROUND UTILITY, JUNCTION BOXES ARE TO BE 2'–6" CLEAR OF PAVEMENT EDGE. THE CABLE INSTALLATION IS TO HAVE A MINIMUM BURY DEPTH OF 2'–0" WITH THE INDIVIDUAL RESIDENCE SERVICE TO HAVE A MINIMUM BURY DEPTH OF 2'–0" UNDER THE PAVING. OVERHEAD METERS AND/OR JUNCTION TYPE EQUIPMENT MUST MAINTAIN A MINIMUM OF 3'–0" FROM EDGE OF PAVEMENT OR FIRE LANES.
4. WHERE THE TELEPHONE SUPPLY AND SERVICES ARE TO BE AN UNDERGROUND UTILITY THE CABLE IS TO HAVE A MINIMUM BURY DEPTH OF 2'–0" WITH THE INDIVIDUAL RESIDENCE SERVICE TO HAVE A MINIMUM BURY DEPTH OF 2'–0" UNDER THE PAVING. ALL ABOVE GROUND APPURTENANCES ARE TO HAVE A MINIMUM CLEARANCE OF 2'–6" FROM EDGE OF PAVEMENT OR FIRE LANES.

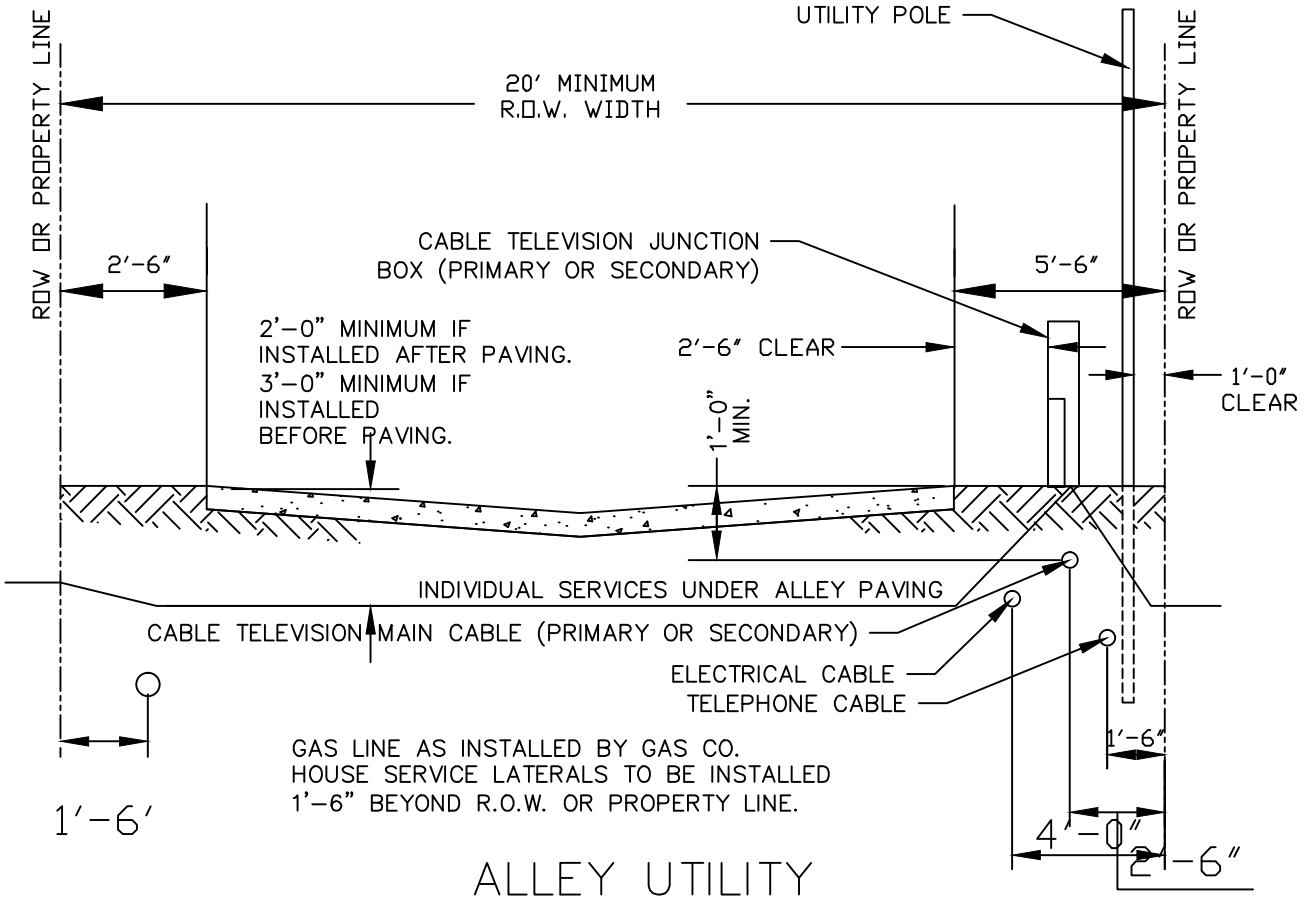

ALLEY UTILITY LOCATION

N.T.S.

GENERAL DESIGN STANDARDS
UTILITY LOCATION DETAILS

SCALE: NTS DATE: 01/2013
SHEET 1 OF 1

CARROLLTON TEXAS

UTILITY LOCATION PLAN (ALLEY) &
GENERAL NOTES FOR STREETS & ALLEYS

U-2

ENGINEERING DEPARTMENT

FILENAME: U-2_1-1.DWG

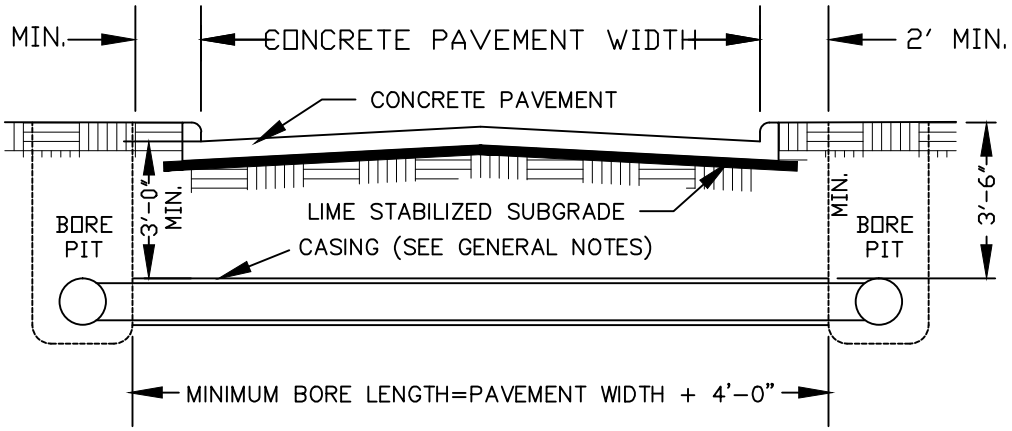

EXISTING CONCRETE PAVEMENT UTILITY INSTALLATION BORE

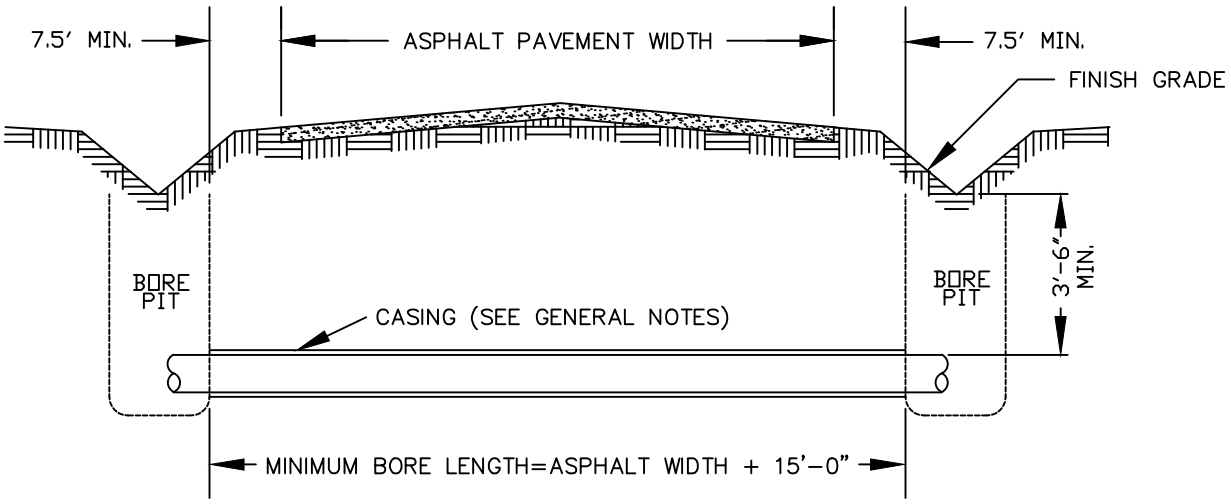

EXISTING ASPHALT PAVEMENT UTILITY INSTALLATION BORE

GENERAL NOTES:

1. THE USE OF A CASING PIPE WILL BE BASED UPON THE SPECIFIC PROJECT AND SOIL CONDITIONS. THE APPROVED PLANS WILL SHOW THE CASING PIPE WHERE REQUIRED AND THE REQUIRED MATERIALS AS SHOWN IN THE CITY OF CARROLLTON STANDARD DETAILS. IN ALL CASES THE INSTALLATION SHALL CONFORM WITH THE GOVERNING AUTHORITY'S STANDARDS.

2. WHERE A BORE PIT EXCEEDS (5) FIVE FEET IN DEPTH THE CONTRACTOR SHALL INSTALL SHORING OF THE PIT WALLS AS REQUIRED BY TEXAS STATE LAW (HB 662 AND HB 665) REGARDING THE SAFETY SYSTEMS TO BE USED DURING TRENCH EXCAVATION (AS STATED IN THE OCCUPATION SAFETY AND HEALTH ADMINISTRATION STANDARDS).

3. ALL BORE PITS SHALL BE BACKFILLED WITHIN FORTY EIGHT (48) HOURS OF UTILITY INSTALLATION. NO BORE PIT SHALL REMAIN OPEN IN EXCESS OF SEVENTY TWO (72) HOURS WITHOUT SHORING TO PREVENT CAVING OF PIT WALLS.

4. WHERE A BORE IS TO BE PARTIALLY OR COMPLETELY ABANDONED, SAID BORE SHALL BE COMPLETELY FILLED WITH HYDRAULICALLY PLACED CEMENT GROUT.

5. CORRUGATED METAL PIPE SHALL NOT BE ACCEPTED AS AN ENCASEMENT PIPE. ONLY DUCTILE IRON PIPE, REINFORCED CONCRETE PIPE, OR HIGH DENSITY STEEL PIPE DESIGNED TO SUIT THE EXISTING SOIL CONDITIONS SHALL BE USED.

GENERAL DESIGN STANDARDS
UTILITY LOCATION DETAILS

SCALE: NTS DATE: 01/2005
SHEET 1 OF 4

CARROLLTON TEXAS

UTILITY INSTALLATION BORE DETAILS

U-3

ENGINEERING DEPARTMENT

FILENAME: U-3_1-4.DWG

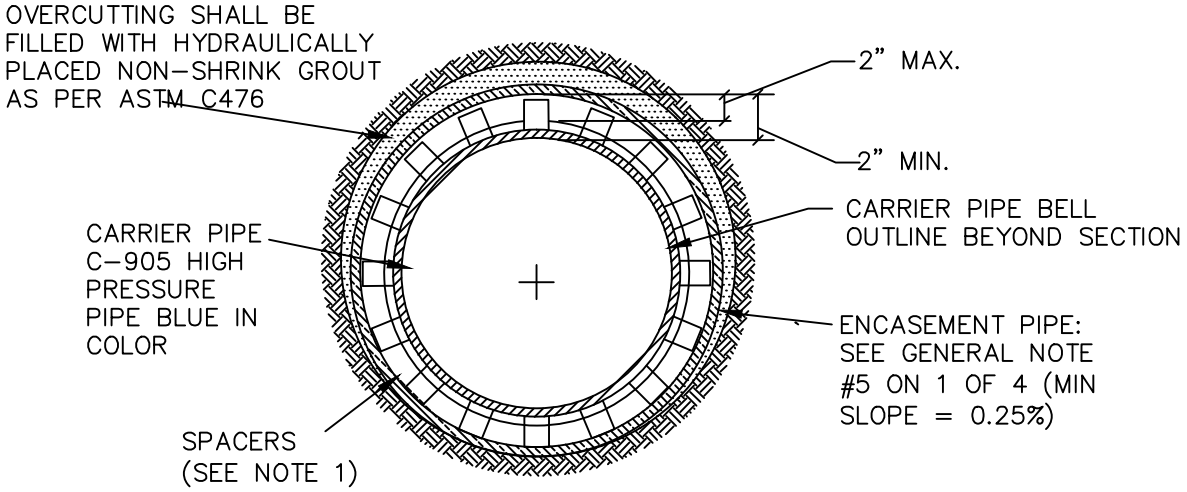

WATER MAIN ENCASEMENT

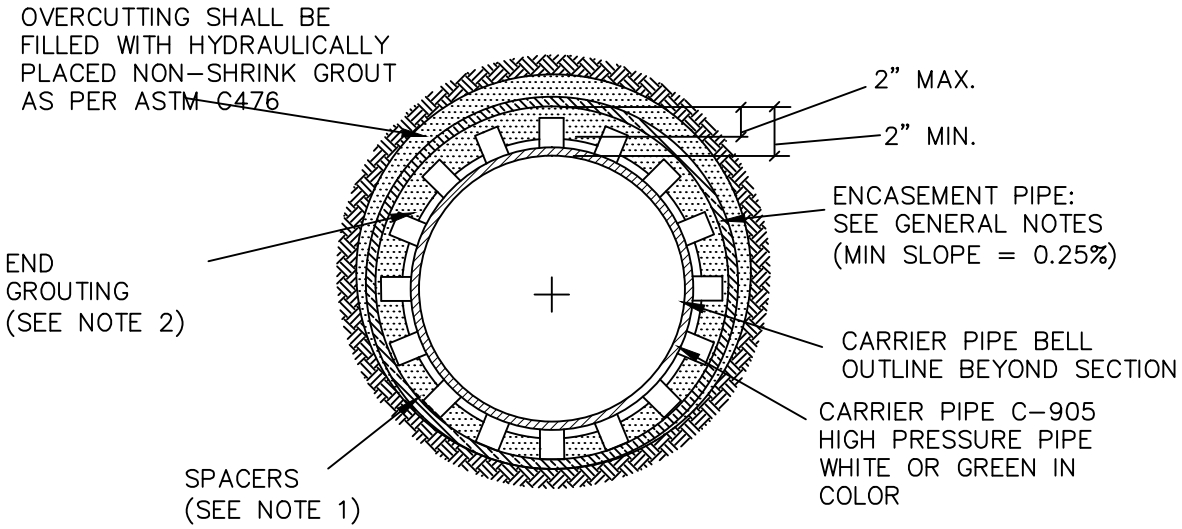

SEWER MAIN ENCASEMENT

NOTES:

(1) HIGH DENSITY POLYETHYLENE SPACERS, RACI OR EQUAL, SHALL BE USED. WHERE NO CASING PIPE IS REQUIRED OVERCUTTING AROUND UTILITY SHALL BE FILLED WITH HYDRAULICALLY PLACED NON-SHRINK GROUT AS PER ASTM C476.

(2) END GROUTING FOR ALL ENCASEMENTS SHALL BE AS PER ASTM STANDARD C476 (1:7 GROUT WITH 5% TO 40% AIR ENTRAINMENT). GROUT SHALL BE PLACED BY HYDRAULIC PUMP FROM THE LOWER END OF THE ENCASEMENT PIPE, THEREBY INSURING COMPLETE FILLING OF ENCASEMENT PIPE,

GENERAL DESIGN STANDARDS
UTILITY LOCATION DETAILS

SCALE: NTS DATE: 01/2006
SHEET 2 OF 4

CARROLLTON TEXAS

UTILITY INSTALLATION BORE DETAILS

U-3

ENGINEERING DEPARTMENT

FILENAME: U-3_2-4.DWG

RAILROAD UTILITY CROSSINGS

ALL RAILROAD CROSSINGS SHALL CONFORM TO ITEM 6.6.4 OF THE NORTH CENTRAL TEXAS STANDARD SPECIFICATIONS FOR PUBLIC WORKS CONSTRUCTION AND THE APPLICABLE RAILROAD COMPANY STANDARDS.

RAILROAD CROSSINGS FOR ALL SANITARY SEWER LINES AND FOR WATER MAINS TWELVE (12) INCHES AND UNDER SHALL REQUIRE AN ENCASEMENT PIPE AT LEAST TWO (2) INCHES GREATER IN DIAMETER THAN THE LARGEST OUTSIDE DIAMETER OF THE CARRIER PIPE. THE ENCASEMENT PIPE FOR WATER MAINS OVER TWELVE (12) INCHES IN DIAMETER SHALL BE STEEL PIPE OR REINFORCED CONCRETE PIPE (RCP) TO SUIT THE LOAD CONDITIONS AT THE CROSSING SITE OR AS REQUIRED BY THE OWNING RAILROAD COMPANY. THE ENCASEMENT PIPE SHALL BE LAID ON A MINIMUM OF A 0.25 PERCENT SLOPE FOR DRAINAGE OF THE ENCASEMENT PIPE. IN ALL CASES THE ENCASEMENT PIPE SHALL BE PLUGGED AT EACH END WITH A CLAY PLUG TO PREVENT THE ENTRANCE OF EXCESSIVE GROUND WATER, BUT WHICH SHALL ALLOW WATER TO LEAK OUT OF THE ENCASEMENT PIPE IN THE EVENT OF A PRESSURE LEAK IN THE CARRIER PIPE. FOR ALL SEWER LINES AND MAINS, THE VOID BETWEEN THE CARRIER PIPE AND THE ENCASEMENT PIPE SHALL BE PRESSURE GROUTED AS PER ASTM C476 (1:7 RATIO GROUT MIX WITH 5 TO 40 PERCENT AIR ENTRAINMENT).

THE TOP OF ENCASEMENT PIPE SHALL BE A MINIMUM OF 5.5' FEET BELOW THE BASE OF THE RAILS AND MUST BE A MINIMUM OF FORTY TWO (42) INCHES BELOW THE FLOW LINE OF ANY DITCH WITHIN THE RAILROAD RIGHT-OF-WAY.

THE LENGTH OF THE ENCASEMENT PIPE SHALL EXCEED EACH SIDE FROM THE CENTERLINE OF THE RAILROAD TRACK(S), MEASURED AT RIGHT ANGLES, A MINIMUM DISTANCE OF TWENTY-FIVE (25) FEET, OR A DISTANCE OF THE DEPTH "D" (WHERE "D" IS THE DEPTH OF THE TOP OF THE ENCASEMENT PIPE BELOW SUBGRADE) TIMES 1.5 PLUS TWELVE (12) FEET. THE ENCASEMENT PIPE SHALL BE TIGHTLY JOINTED TO PREVENT THE INGRESS OF GROUNDWATER.

THE ENCASEMENT PIPE MAY BE INSTALLED BY JACKING, BORING OR TUNNELING. REGARDLESS OF THE METHOD USED, THE ENCASEMENT PIPE SHALL BE INSTALLED WITH AN EVEN BEARING THROUGHOUT ITS LENGTH; ALL VOIDS BETWEEN THE ENCASEMENT PIPE AND THE EARTH OR ROCK SHALL BE PRESSURE GROUTED AS PER ASTM C 476 (1:7 RATIO GROUT WITH 5 TO 40 PERCENT AIR ENTRAINMENT). TIMBER SUPPORTS SHALL NOT BE PERMITTED. WHERE THE RAILROAD RIGHT-OF-WAY CARRIES A MINOR VOLUME OF TRAFFIC AND PERMISSION IS GRANTED BY THE RAILROAD, OPEN CUTTING MAY BE USED TO INSTALL THE ENCASEMENT PIPE TO WITHIN TEN (10) FEET OF THE CENTERLINE OF THE OUTSIDE RAILS OR TOE OF SLOPE, WHICHEVER IS GREATER.

THE CARRIER PIPE SHALL BE OF THE KIND AND CLASS SHOWN ON THE PLANS WITH JOINTS MADE UP OUTSIDE AND PUSHED THROUGH THE END OF THE ENCASEMENT PIPE.

THE CONTRACTOR SHALL OBTAIN ALL REQUIRED INSURANCE COVERAGE AND PROVIDE FOR ANY REQUIRED FEES AND PERMITS REQUIRED BY THE OWNING RAILROAD COMPANY PRIOR TO THE BEGINNING OF ANY WORK WITHIN THE RAILROAD RIGHT-OF-WAY. THE CONTRACTOR SHALL BE RESPONSIBLE FOR THE NOTIFICATION OF THE OWNING RAILROAD COMPANY'S INSPECTION DEPARTMENT FOR ALL INSPECTIONS THAT ARE REQUIRED OTHER THAN THOSE PRESCRIBED BY THE CITY OF CARROLLTON ENGINEERING DEPARTMENT.

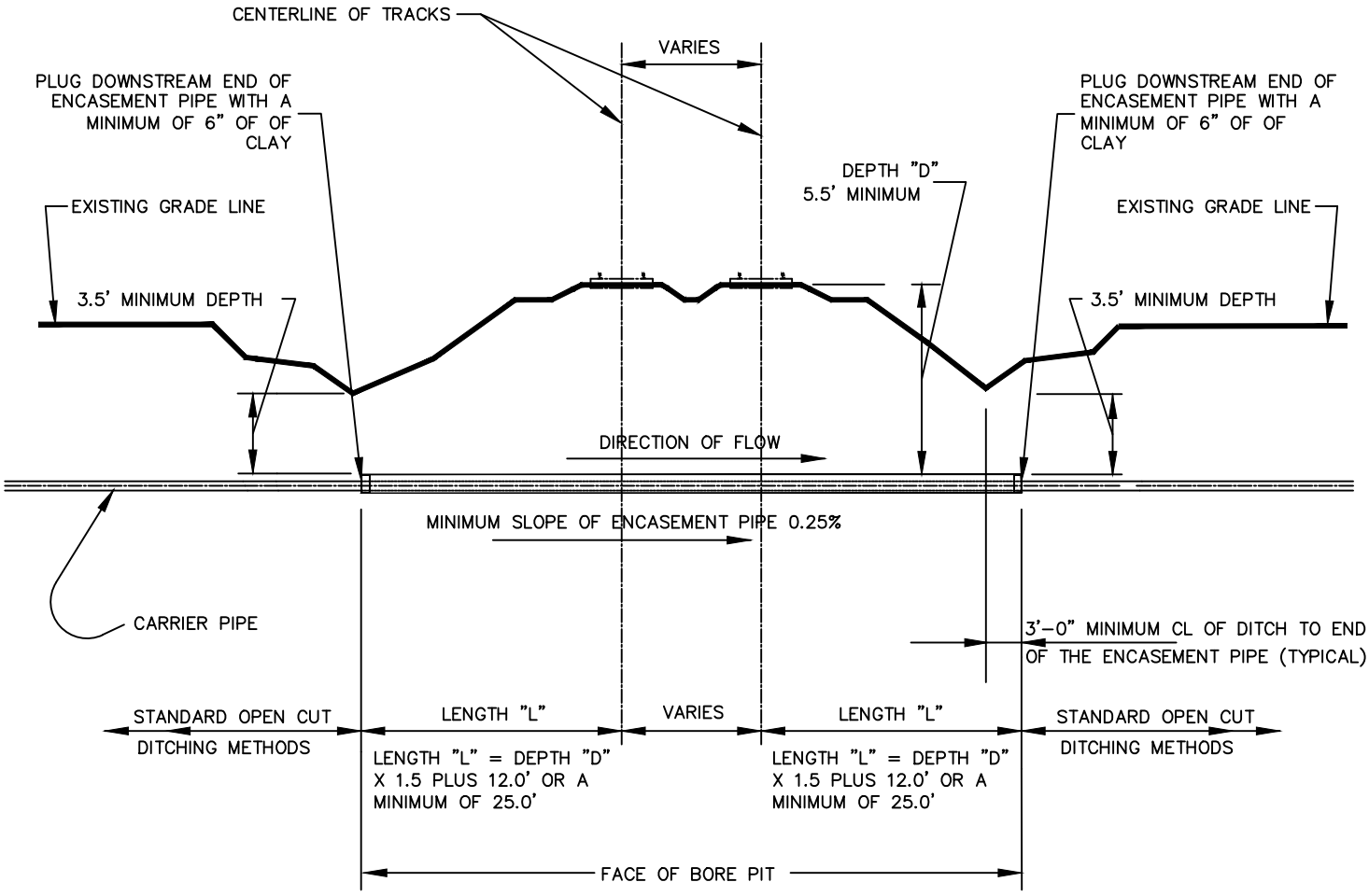

GENERAL ENCASEMENT PIPE NOTES:
ENCASEMENT PIPE–STEEL PIPE FOR WATER MAINS AND REINFORCED CONCRETE CYLINDER OR CORRUGATED METAL PIPE FOR SANITARY SEWER MAINS.

NOTE:
IN ALL CASES THE REQUIRED DESIGN OF THE ENCASEMENT PIPE SHALL BE IN ACCORDANCE WITH THE OWNING RAILROAD'S STANDARDS FOR UTILITY CROSSING CONSTRUCTION.

ENCASEMENT DETAILS PER SHEET U3–2 OF 4

CARROLLTON TEXAS

GENERAL DESIGN STANDARDS
UTILITY LOCATION DETAILS

UTILITY INSTALLATION BORE DETAIL
RAILROAD CROSSING

SCALE: NTS DATE: 01/2004
SHEET 4 OF 4

U-3

ENGINEERING DEPARTMENT

FILENAME: U-3_4-4.DWG

REINFORCING NOTES:
ONLY NEW REINFORCING BARS ARE TO BE USED FOR REPLACEMENT IN STREET CUT REPAIRS. #4 DOWELS 30" LONG ARE TO BE EPOXY GROUTED INTO 5/8" DIAMETER DRILLED HOLES 15" DEEP ON 18" CENTERS IN THE EXISTING CONCRETE. DOWELS ARE TO BE LAPPED WITH #3 REBARS AT 18" CENTERS BOTH DIRECTIONS. ALL REINFORCING SHALL HAVE WIRE TIES AT EVERY INTERSECTION (100% TIE).

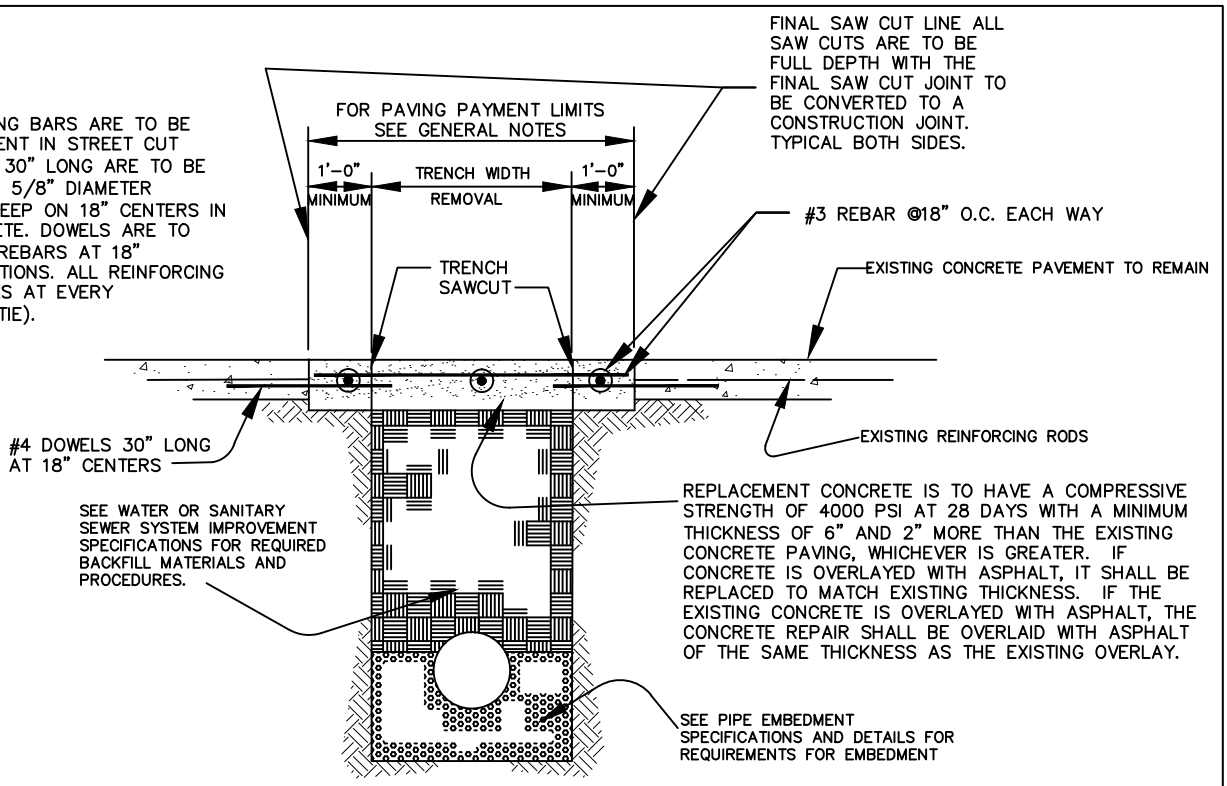

REINFORCED CONCRETE PAVEMENT

GENERAL NOTES:
PAVEMENT REPLACEMENT WIDTH TO BE A MAXIMUM OF TRENCH WIDTH PLUS 2'-0" (WITH A MINIMUM TRENCH WIDTH OF 39 INCHES). IF THE TRENCH WIDTH IS GREATER THAN THE OUTSIDE DIAMETER OF THE PIPE PLUS 16 INCHES, THE EXCESS REPLACEMENT WIDTH WILL BE AT THE CONTRACTORS EXPENSE. BEFORE A CONTRACTOR IS TO BE ALLOWED TO BEGIN WORK IN ANY RIGHT-OF-WAY, STREET, AND/OR EASEMENT WITHIN THE CITY OF CARROLLTON, HE MUST OBTAIN A CONSTRUCTION PERMIT FROM THE CITY OF CARROLLTON ENGINEERING DEPARTMENT.

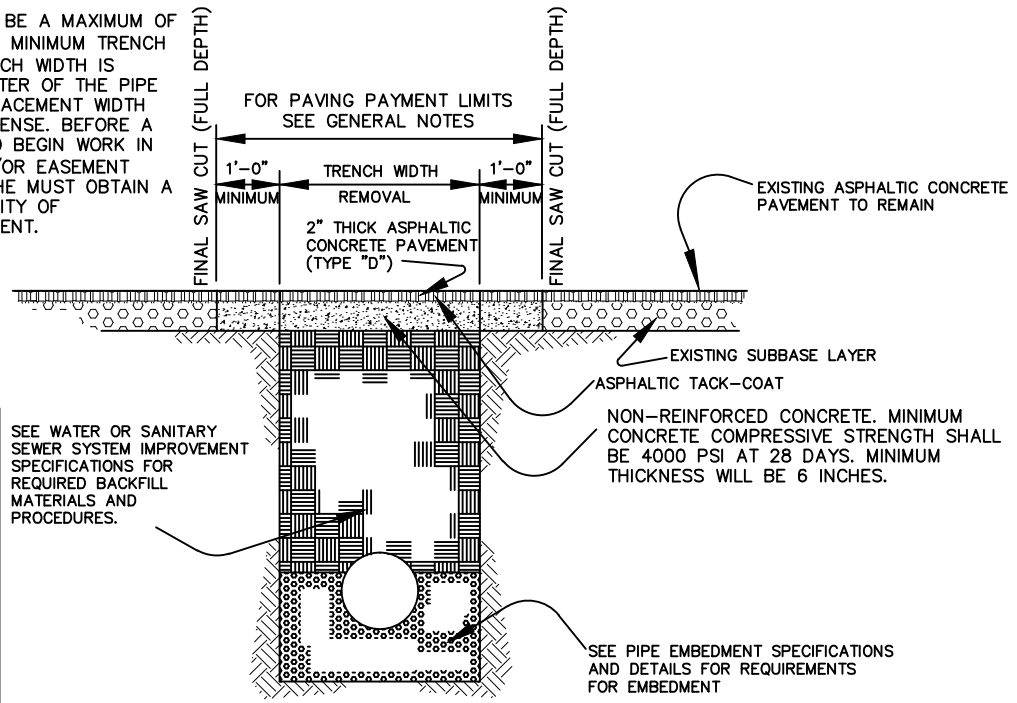

FOR C.I.P. PROJECTS PAVEMENT REMOVALS ARE CALCULATED AS FOLLOWS. ANY ADDITIONAL REMOVAL/REPLACEMENT IS AT CONTRACTOR'S EXPENSE.

PAVEMENT REMOVAL

PIPE SIZE (IN.)	WIDTH (FT.)
4	4
6	4
8	5
12	6
15	7

FLEXIBLE BASE AND ASPHALTIC CONCRETE SURFACE

GENERAL DESIGN STANDARDS
UTILITY LOCATION DETAILS

SCALE: NTS DATE: 01/2006
SHEET 1 OF 5

CARROLLTON TEXAS

STREET CUT REPAIRS

U-4

ENGINEERING DEPARTMENT

FILENAME: U-4_1-5.DWG

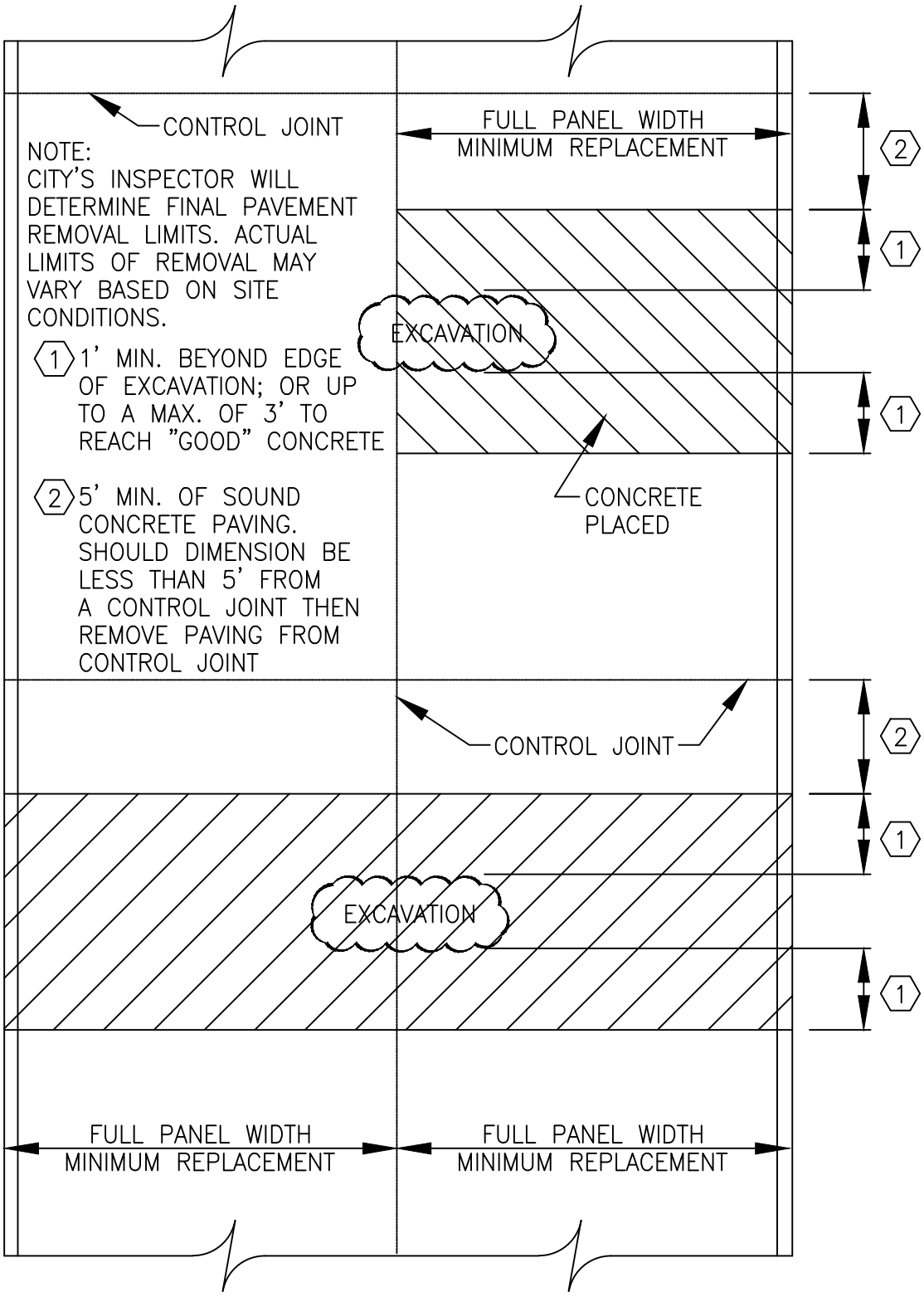

TYPICAL CONCRETE STREET REMOVAL/REPLACEMENT
EXAMPLE 1

GENERAL DESIGN STANDARDS
UTILITY LOCATION DETAILS

SCALE: NTS DATE: 01/10
SHEET 2 OF 5

CARROLLTON
TEXAS

STREET CUT REPAIRS

U-4

ENGINEERING
DEPARTMENT

FILENAME: U-4_2-5.DWG

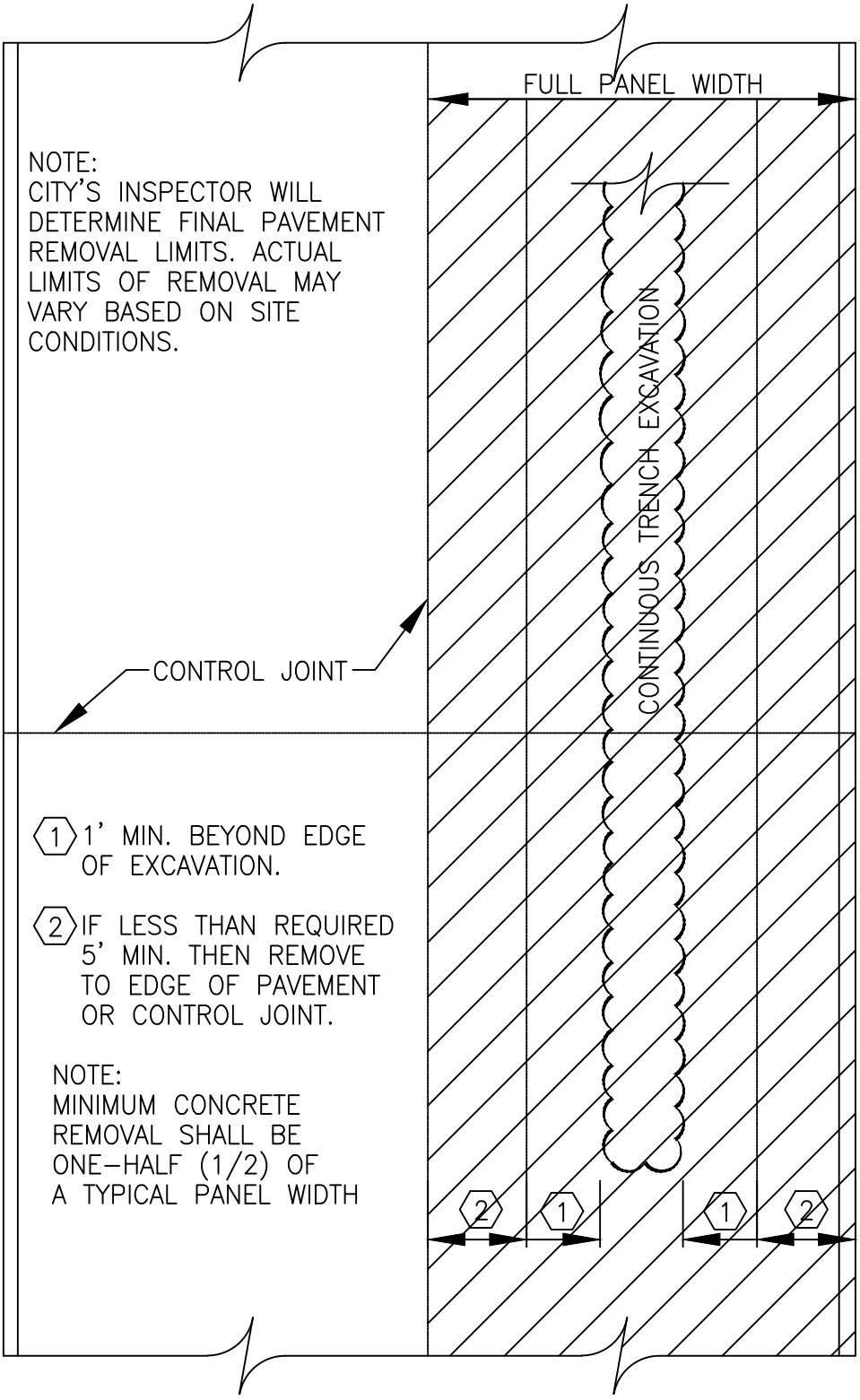

TYPICAL CONCRETE STREET REMOVAL/REPLACEMENT
EXAMPLE 1

GENERAL DESIGN STANDARDS
UTILITY LOCATION DETAILS

SCALE: NTS DATE: 01/10
SHEET 3 OF 5

CARROLLTON
TEXAS

STREET CUT REPAIRS

U-4

ENGINEERING
DEPARTMENT

FILENAME: U-4_3-5.DWG

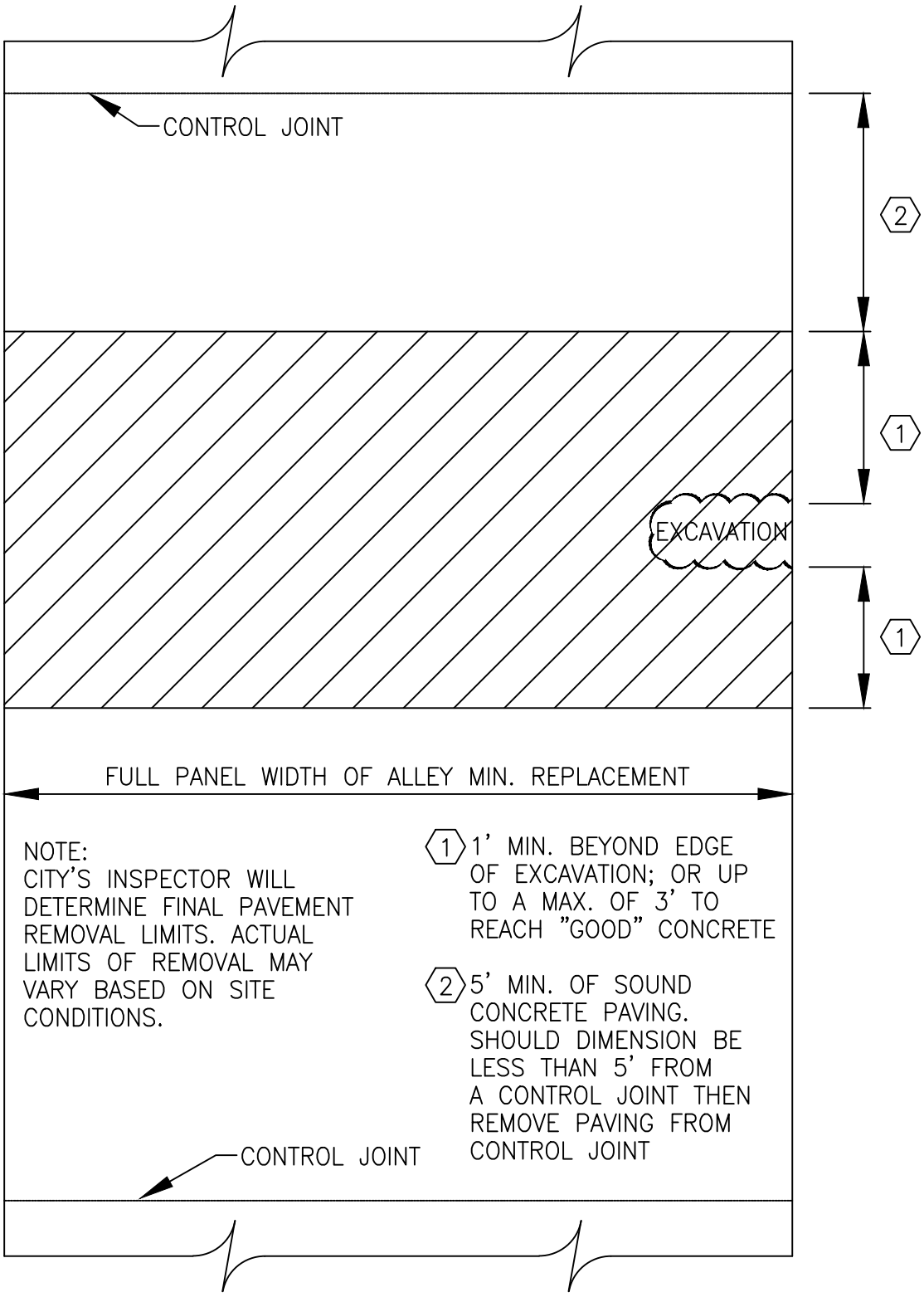

NOTE:
CITY'S INSPECTOR WILL DETERMINE FINAL PAVEMENT REMOVAL LIMITS. ACTUAL LIMITS OF REMOVAL MAY VARY BASED ON SITE CONDITIONS.

1 1' MIN. BEYOND EDGE OF EXCAVATION; OR UP TO A MAX. OF 3' TO REACH "GOOD" CONCRETE

2 5' MIN. OF SOUND CONCRETE PAVING. SHOULD DIMENSION BE LESS THAN 5' FROM A CONTROL JOINT THEN REMOVE PAVING FROM CONTROL JOINT

TYPICAL CONCRETE STREET REMOVAL/REPLACEMENT
EXAMPLE 1

GENERAL DESIGN STANDARDS
UTILITY LOCATION DETAILS

SCALE: NTS DATE: 01/10
SHEET 4 OF 5

CARROLLTON
TEXAS

STREET CUT REPAIRS

U-4

ENGINEERING
DEPARTMENT

FILENAME: U-4_4-5.DWG

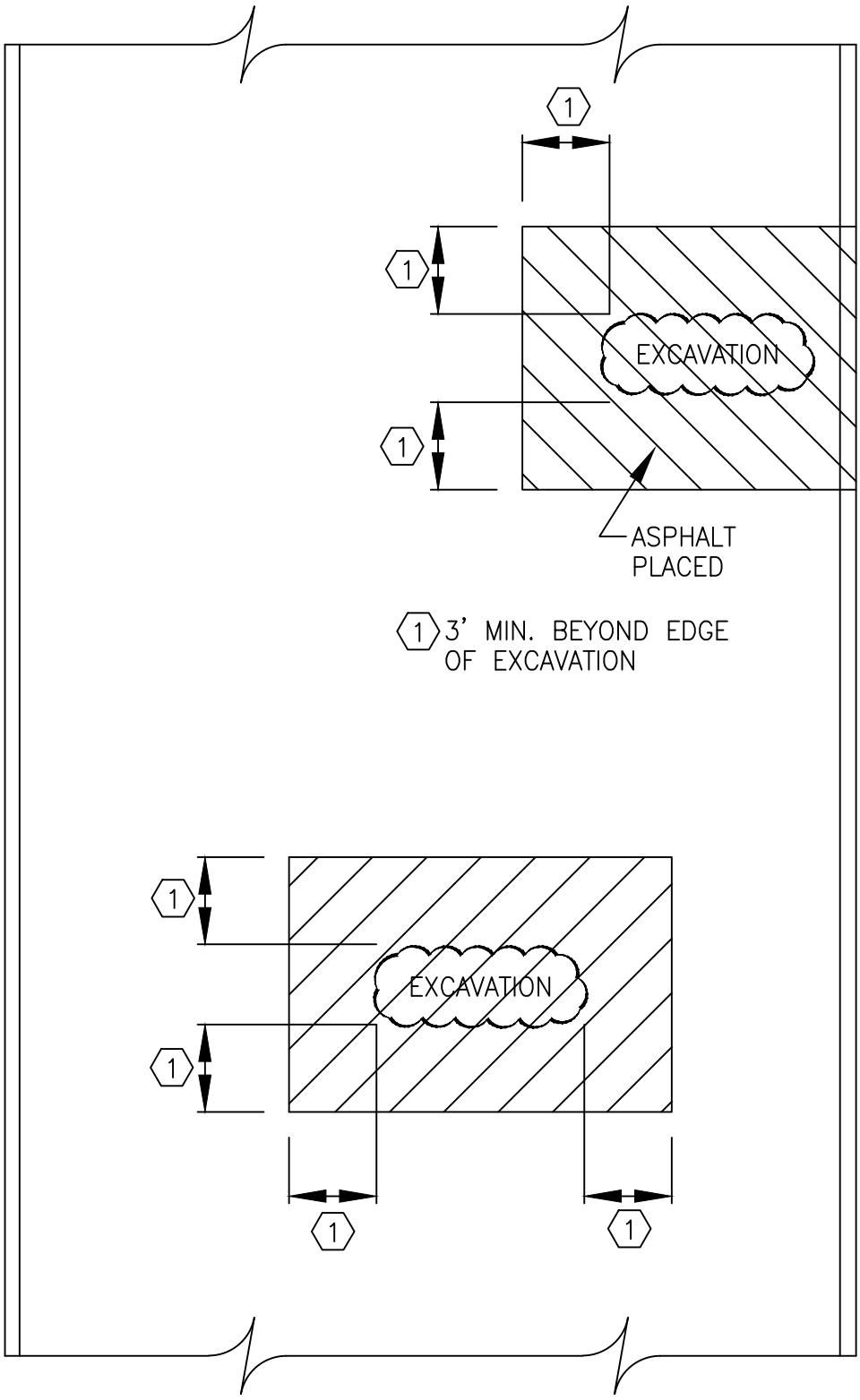

TYPICAL CONCRETE STREET REMOVAL/REPLACEMENT
EXAMPLE 1

GENERAL DESIGN STANDARDS
UTILITY LOCATION DETAILS

SCALE: NTS DATE: 01/10
SHEET 5 OF 5

CARROLLTON
TEXAS

STREET CUT REPAIRS

U-4

ENGINEERING
DEPARTMENT

FILENAME: U-4_5-5.DWG

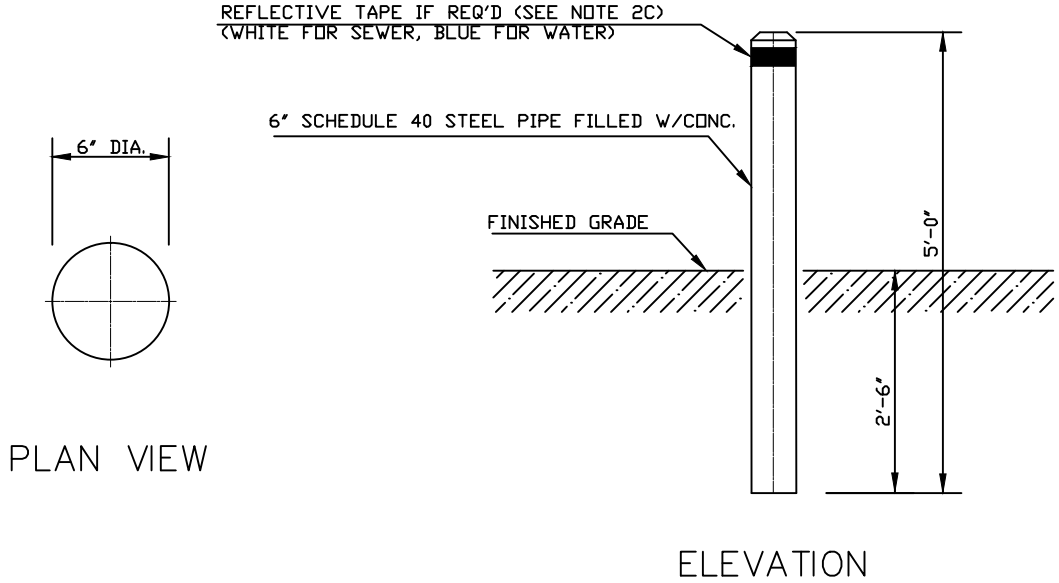

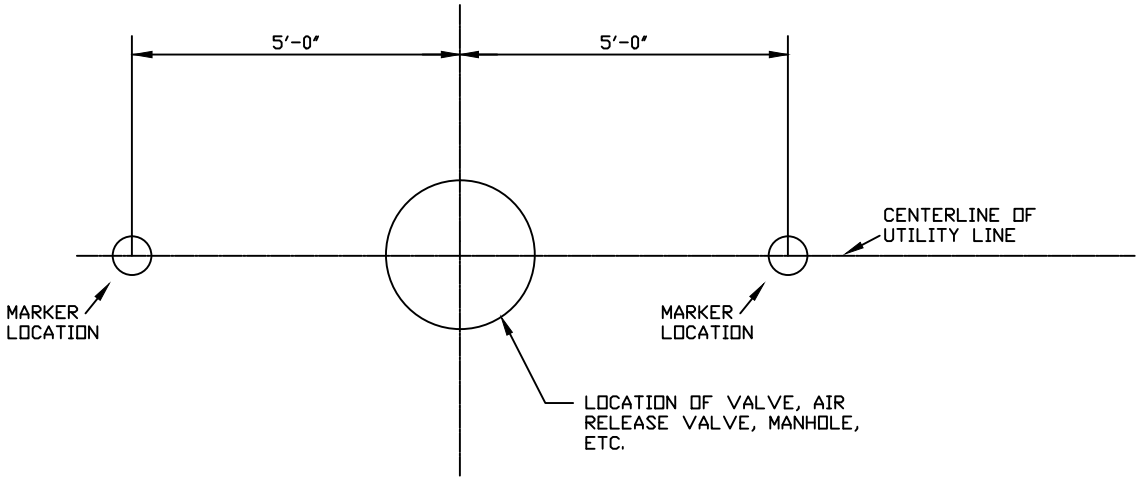

FIELD INSTALLATION DETAIL

GENERAL NOTES

1. ALL OFFSITE UTILITIES WITH BURIED CONTROL VALVES, CLEANOUTS AND MANHOLES SHALL BE MARKED AS DETAILED ON THIS SHEET.

2. PAINTING (MINIMUM TWO (2) COATS REQUIRED):
   A. WATER UTILITY MARKERS TO BE PAINTED WITH GLIDDEN "GLID-GUARD" INDUSTRIAL ENAMEL No.4564 IMPERIAL BLUE OR EQUAL.
   B. SEWER UTILITY MARKERS TO BE PAINTED WITH GLIDDEN "GLID-GUARD" INDUSTRIAL ENAMEL No.4520 SAFETY RED OR EQUAL.
   C. ALTERNATIVE COLORS (INCLUDING FOREST GREEN AND BROWN) MAY BE SELECTED ON A CASE-BY-CASE BASIS TO BLEND INTO SURROUNDING AREAS SUCH AS GREENBELTS. A 1" WIDE REFLECTIVE TAPE (3M TYPE 9 OR EQUAL) SHALL BE INSTALLED AROUND THE TOP OF THE MARKER IN THESE CASES.

CARROLLTON
TEXAS

GENERAL DESIGN STANDARDS
UTILITY LOCATION DETAILS

OFFSITE UTILITIES CONTROLS MARKER

SCALE: NTS DATE: 01/2005
SHEET 1 OF 1

U-5

ENGINEERING
DEPARTMENT

FILENAME: U-5_1-1.DWG