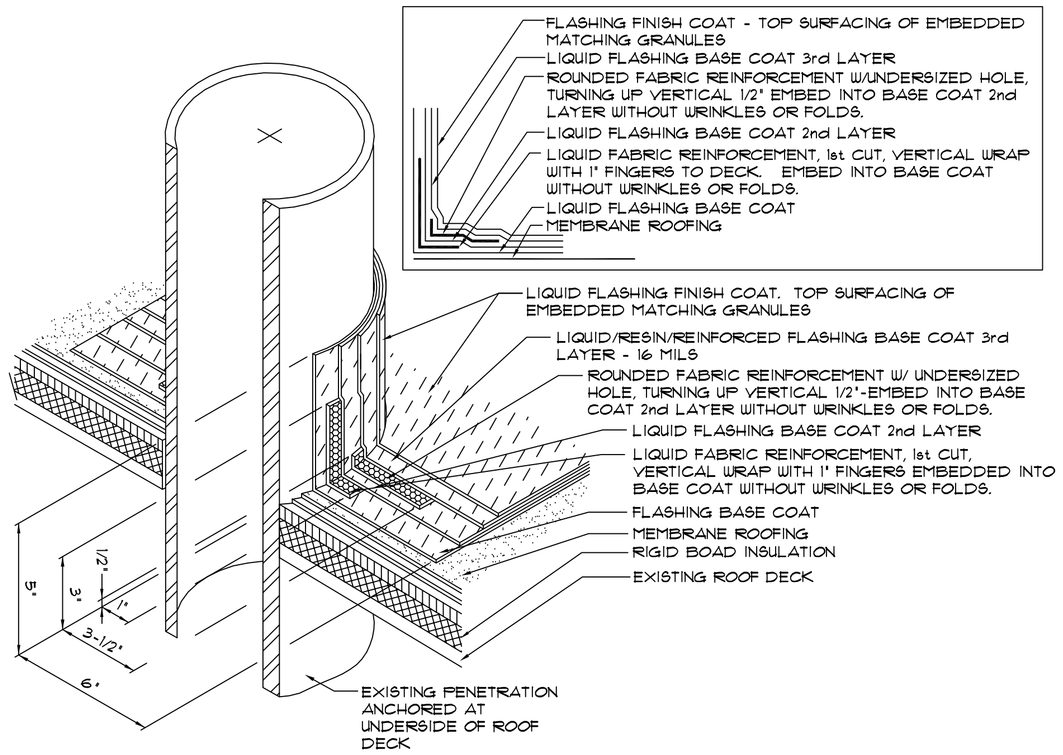

1 LIQUID APPLIED FLASHING DETAIL
N.T.S.

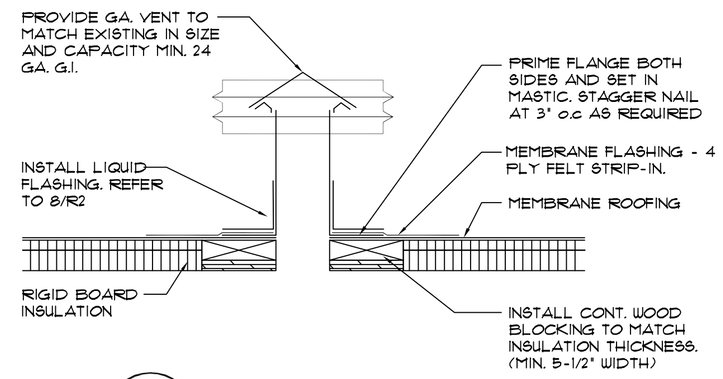

2 STANDARD VENT
N.T.S.

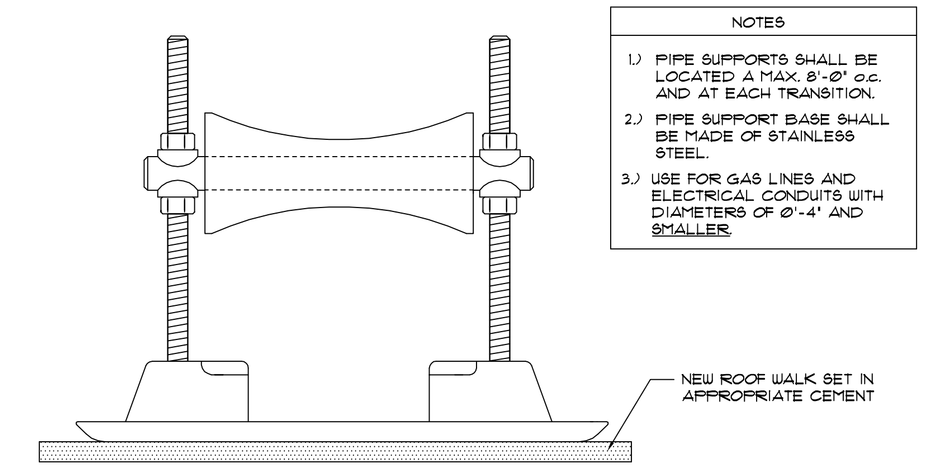

NOTES

1.) PIPE SUPPORTS SHALL BE LOCATED A MAX. 8'-0" o.c. AND AT EACH TRANSITION.

2.) PIPE SUPPORT BASE SHALL BE MADE OF STAINLESS STEEL.

3.) USE FOR GAS LINES AND ELECTRICAL CONDUITS WITH DIAMETERS OF 0'-4" AND SMALLER.

3 TYPICAL PIPE SUPPORT
N.T.S.

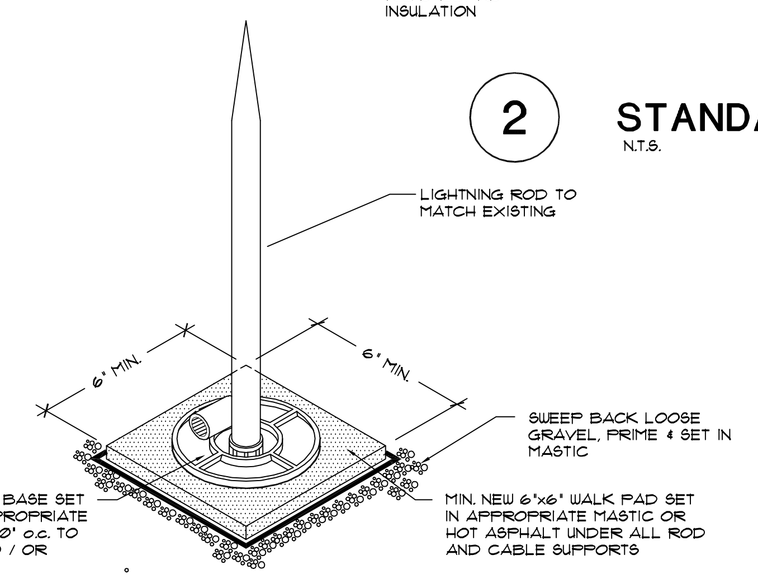

5 LIGHTNING PROTECTION SUPPORTS
N.T.S.

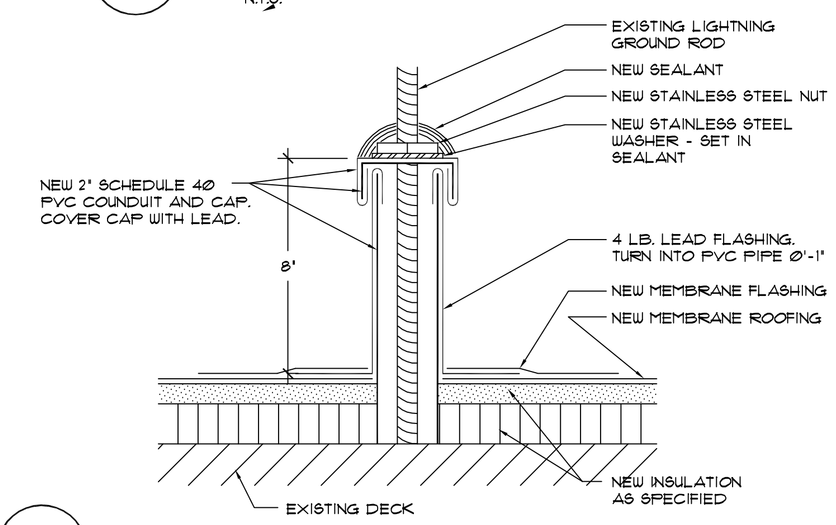

6 LIGHTNING GROUND ROD
N.T.S.

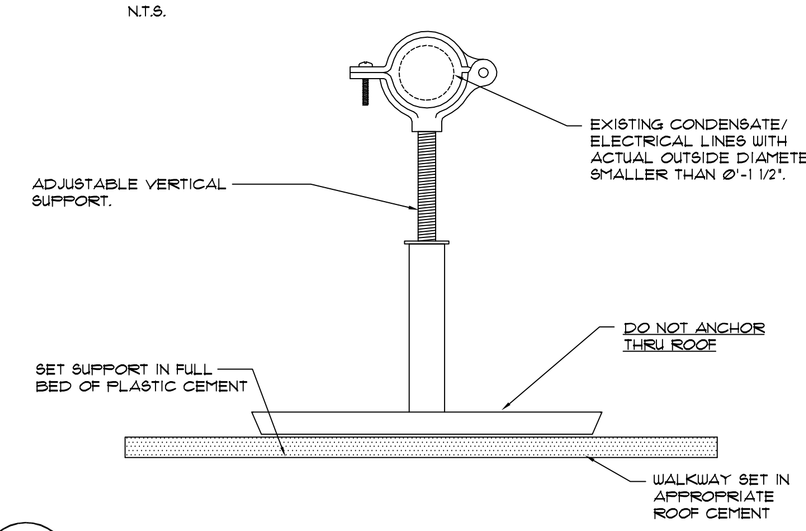

4 CONDUIT / ELECTRICAL LINE SUPPORT
N.T.S.

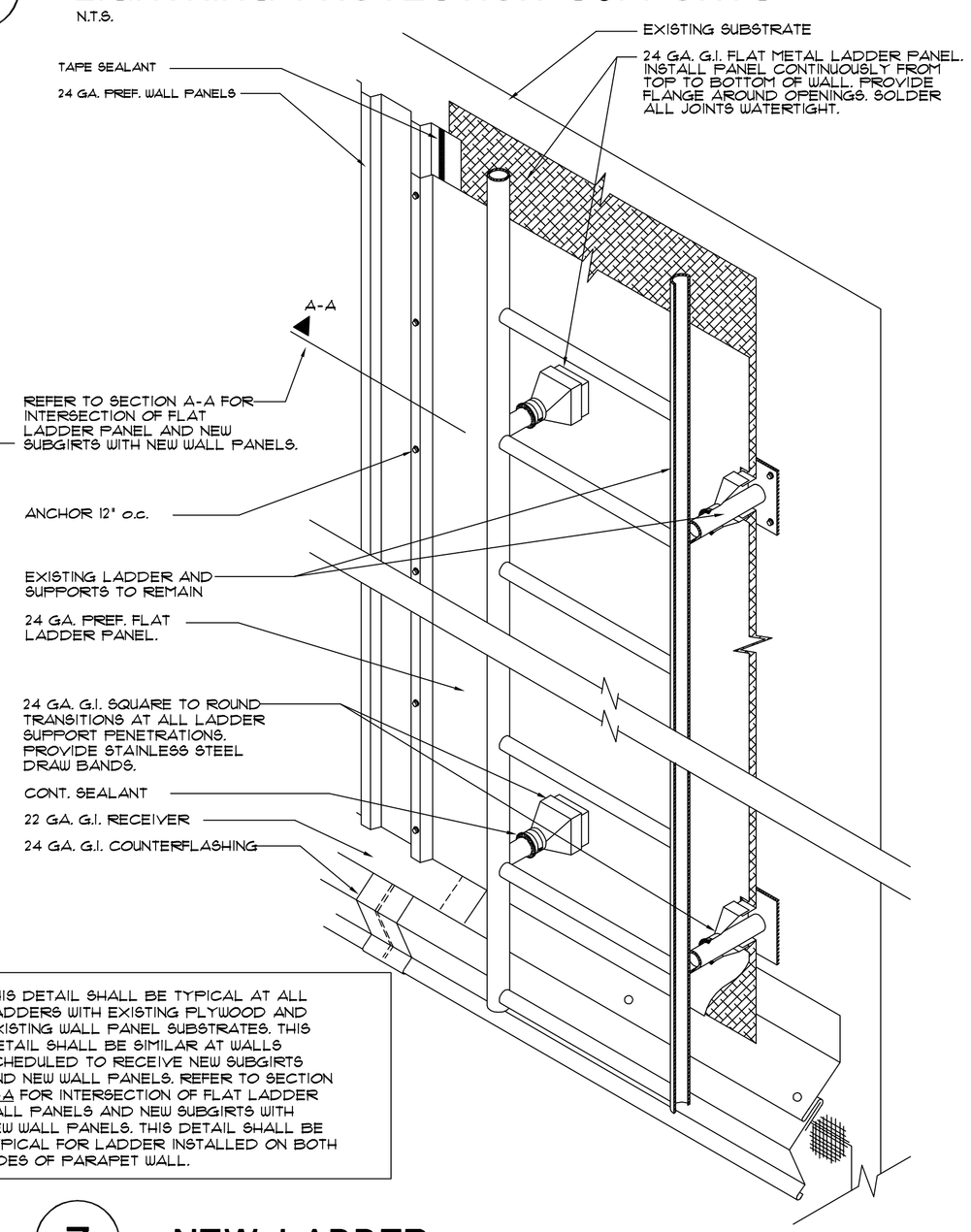

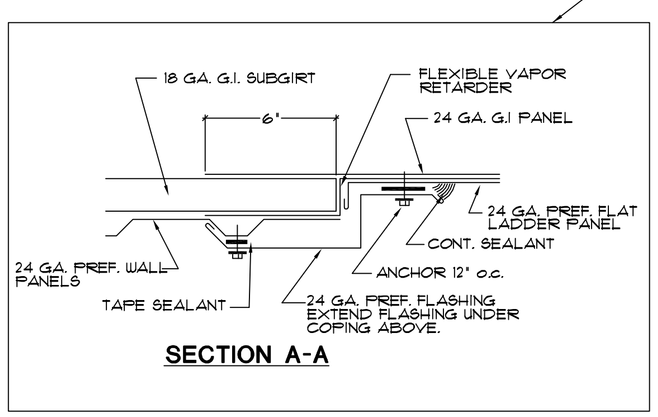

SECTION A-A

NOTE: THIS DETAIL SHALL BE TYPICAL AT ALL LADDERS WITH EXISTING PLYWOOD AND EXISTING WALL PANEL SUBSTRATES. THIS DETAIL SHALL BE SIMILAR AT WALLS SCHEDULED TO RECEIVE NEW SUBGIRTS AND NEW WALL PANELS. REFER TO SECTION A-A FOR INTERSECTION OF FLAT LADDER WALL PANELS AND NEW SUBGIRTS WITH NEW WALL PANELS. THIS DETAIL SHALL BE TYPICAL FOR LADDER INSTALLED ON BOTH SIDES OF PARAPET WALL.

7 NEW LADDER
N.T.S.

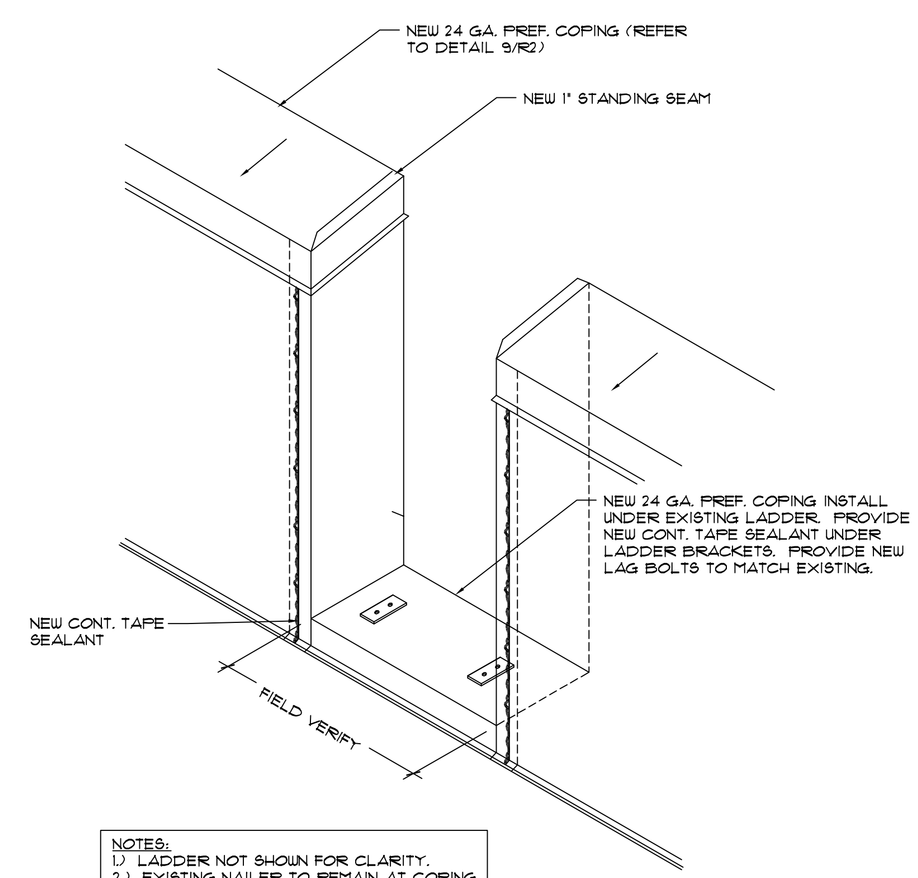

NOTES:
1.) LADDER NOT SHOWN FOR CLARITY.
2.) EXISTING NAILER TO REMAIN AT COPING SECTION AT LADDER.

8 COPING AT LADDER
N.T.S.

13-050_R2.5.dwg

ROOFTECH
8151 Broadway, ste 109-B
San Antonio, TX. 78209
Ph: (210) 832-9917

1944 Handley Drive
Fort Worth, TX. 76112
Ph: (817) 450-4631

* Architects * Engineers * Roof Consultants

Carrollton Justice Center / Fire Training Center
2025 E. Jackson Road 2301 N. Josey Lane
Carrollton, Texas 75006 Carrollton, Texas 75006

Bobby Ballard Pump Station
4750 N. Josey Lane
Carrollton, Texas 75010

REGISTERED ARCHITECT CINDY L. CHADWELL STATE OF TEXAS

THE SEAL APPEARING ON THIS DOCUMENT WAS AUTHORIZED BY CINDY L. CHADWELL ON 08/25/2015

Drawn By:	J.T.
Checked By:	C.L.C.
Project Number:	13-050
Issue For 100% CD Set: 08/25/2015	

© 2015 ROOFTECH INC.
All Rights Reserved.
All materials embodied herein constitute an original work by the Architect; the Architect owns all copyrights herein. The viewer may not reproduce, display or distribute this work or prepare derivative works based on this work without the express written consent of the copyright owner.

Revision	Date
1	
2	
3	
4	
5	

Sheet: R2.5
OF 11 SHEETS