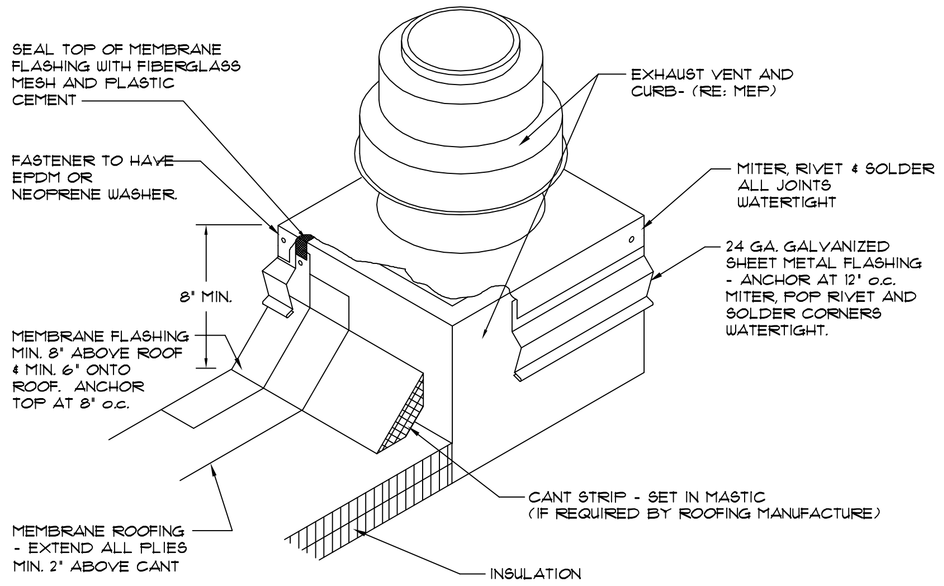

1 CURB MOUNTED VENT
N.T.S.

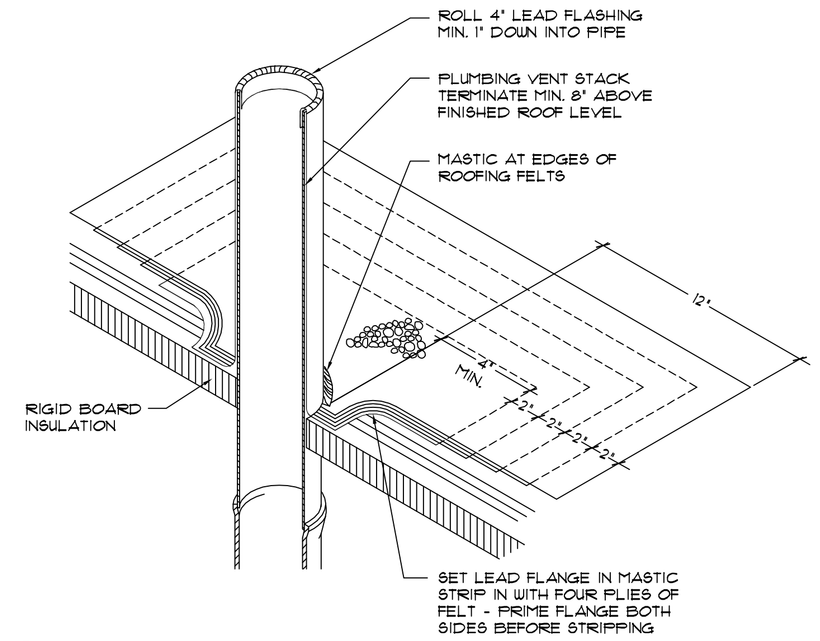

2 PLUMBING VENT FLASHING
N.T.S.

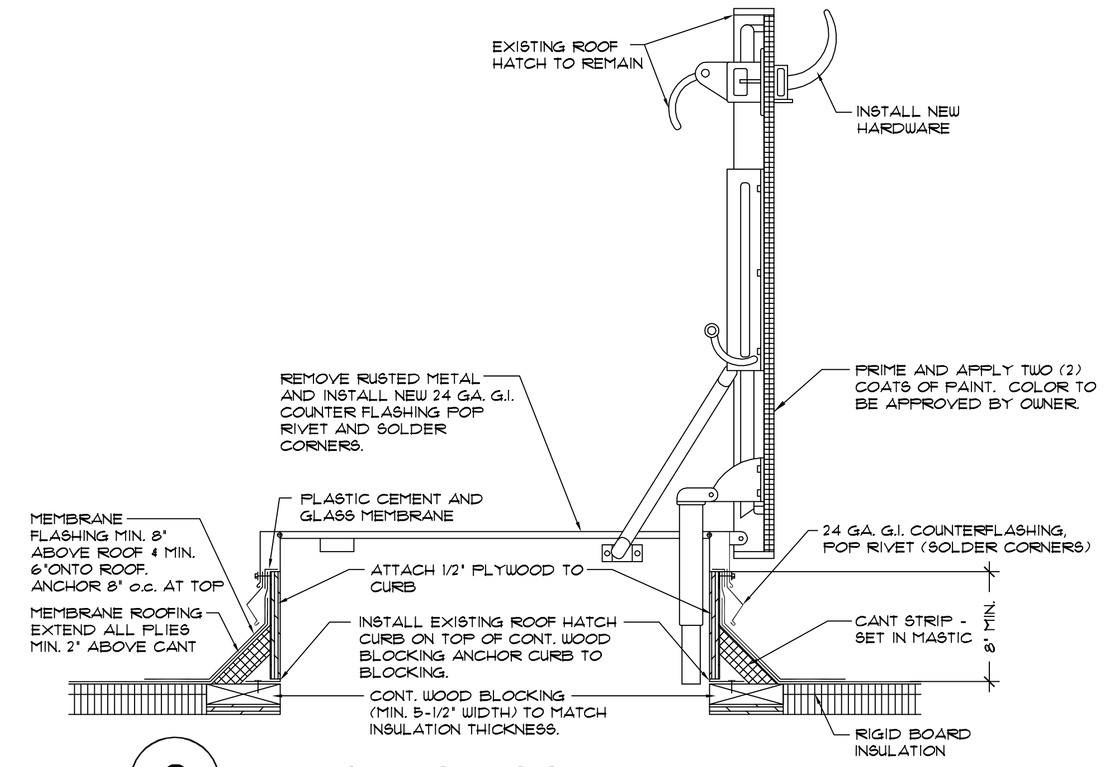

3 EXISTING ROOF HATCH
N.T.S.

NOTE:
1.) RAISE ROOF TOP UNIT AS REQUIRED TO PROPERLY INSTALL BASE MEMBRANE FLASHING. ADD NEW CONTINUOUS WOOD BLOCKING TO ACHIEVE A MIN. 8" ABOVE CURB HEIGHT.

2.) EXTEND DUCTWORK AND ELECTRICAL SUPPLY AS REQUIRED TO SERVICE UNIT AT NEW RAISED HEIGHT.

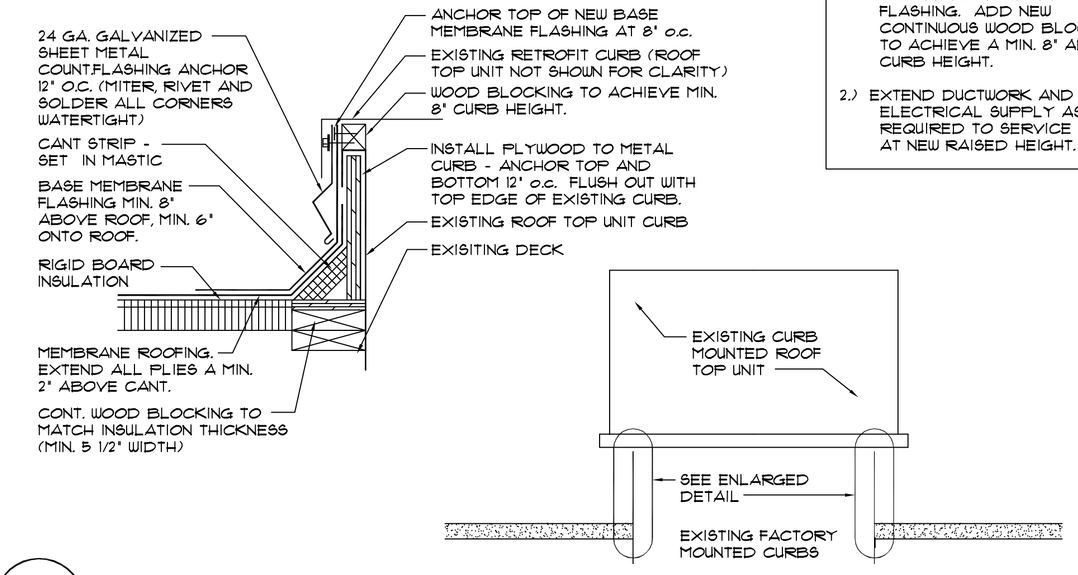

4 RAISE FACTORY MOUNTED CURBS
N.T.S.

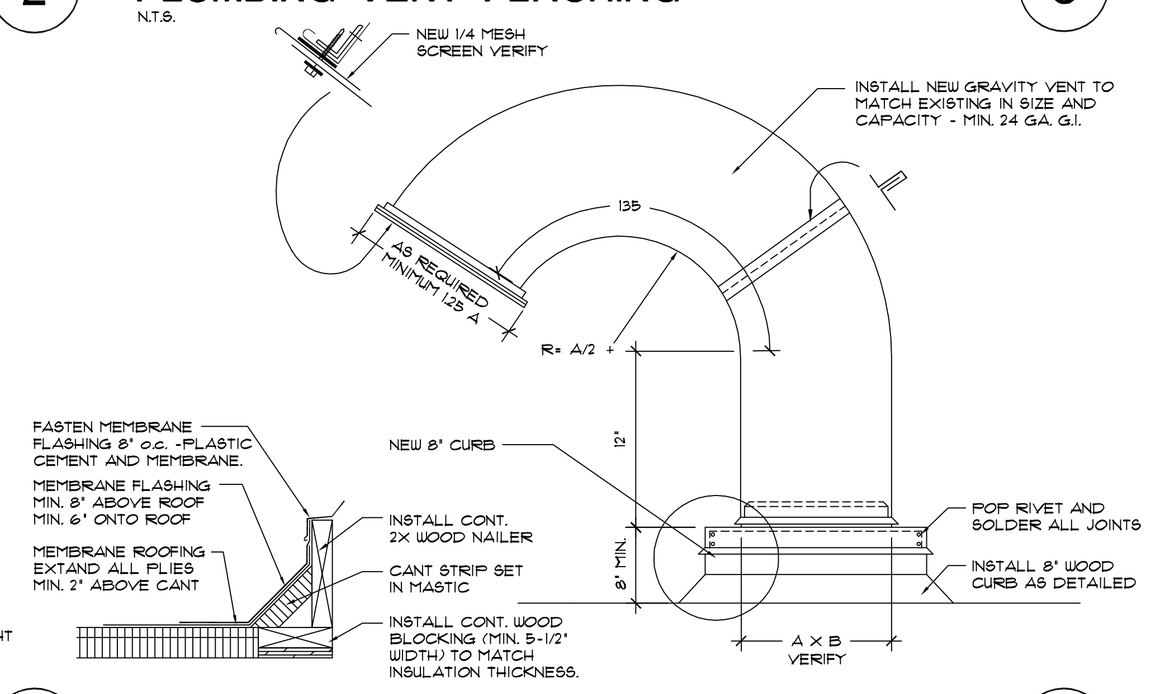

5 GRAVITY VENT
N.T.S.

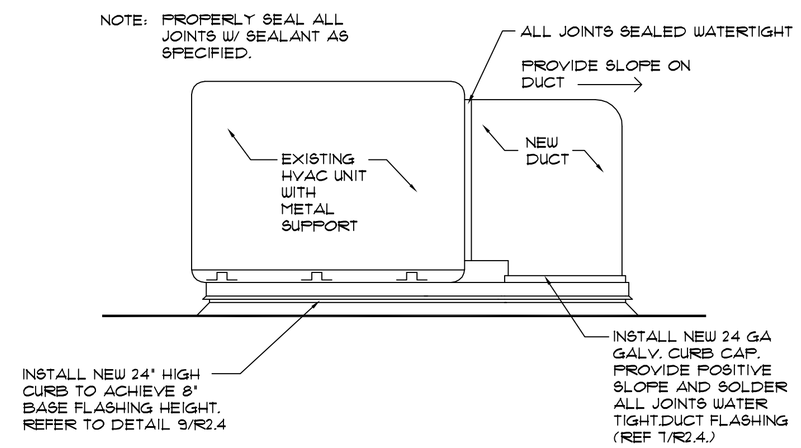

6 TYPICAL EQUIPMENT
N.T.S.

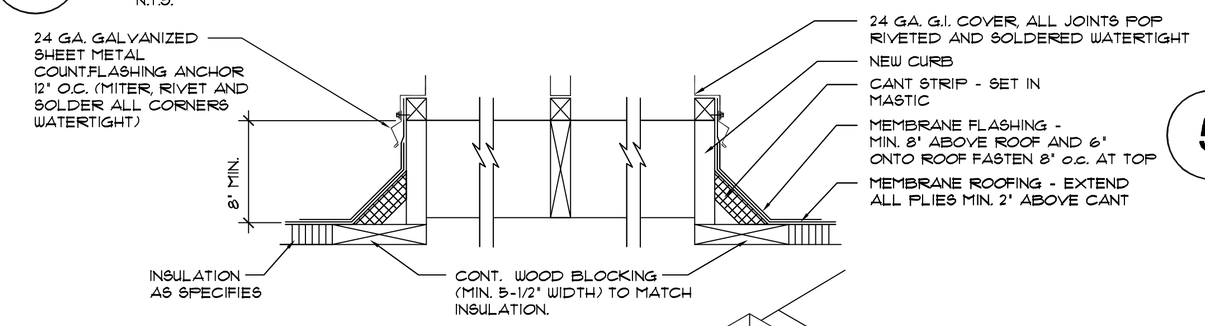

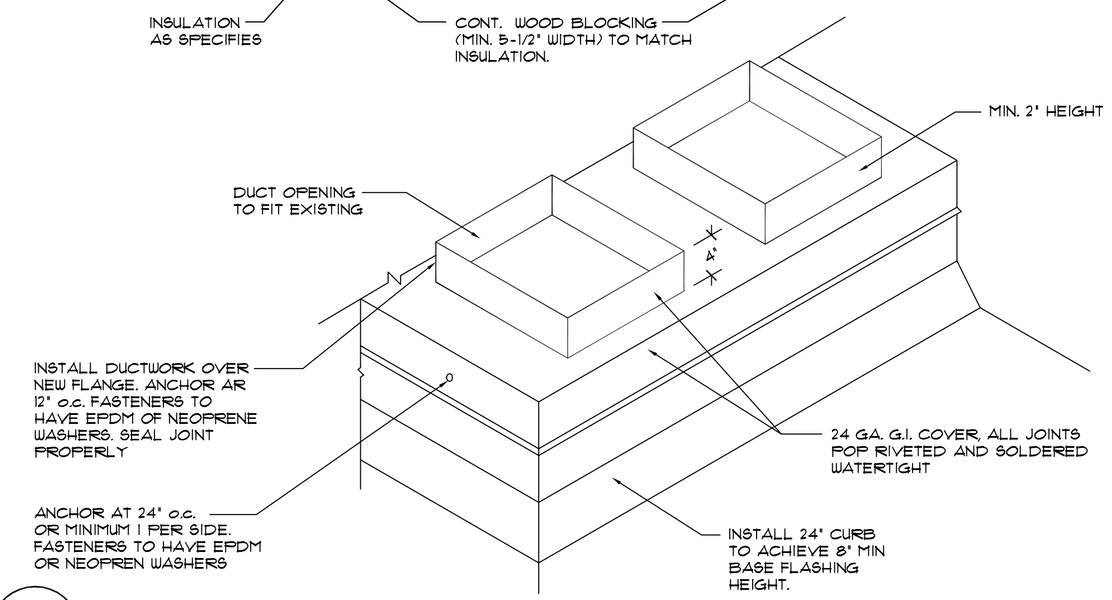

7 DUCT FLASHING
N.T.S.

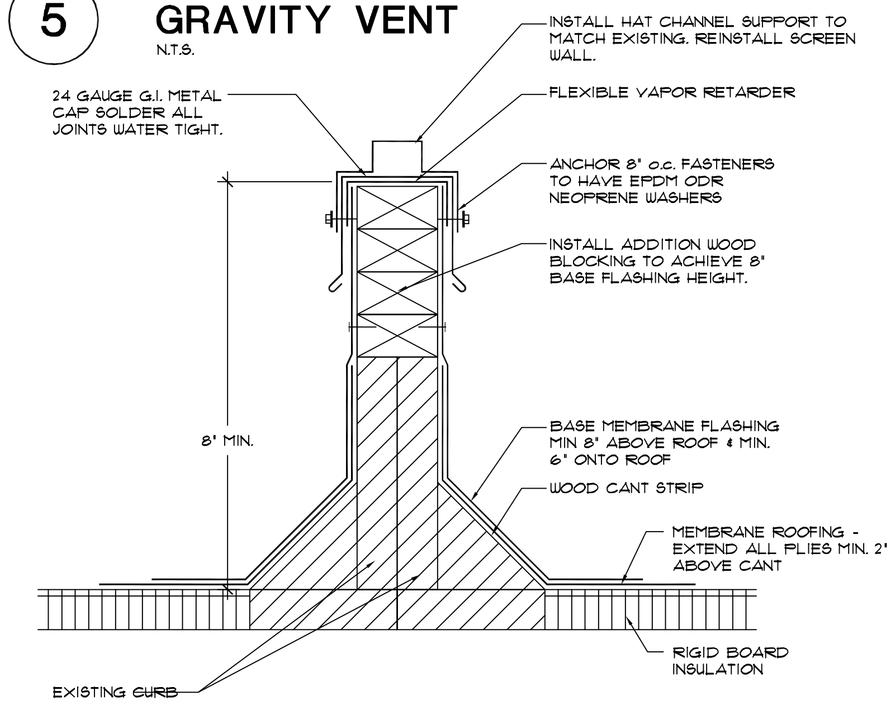

8 SCREEN WALL SUPPORT
N.T.S.

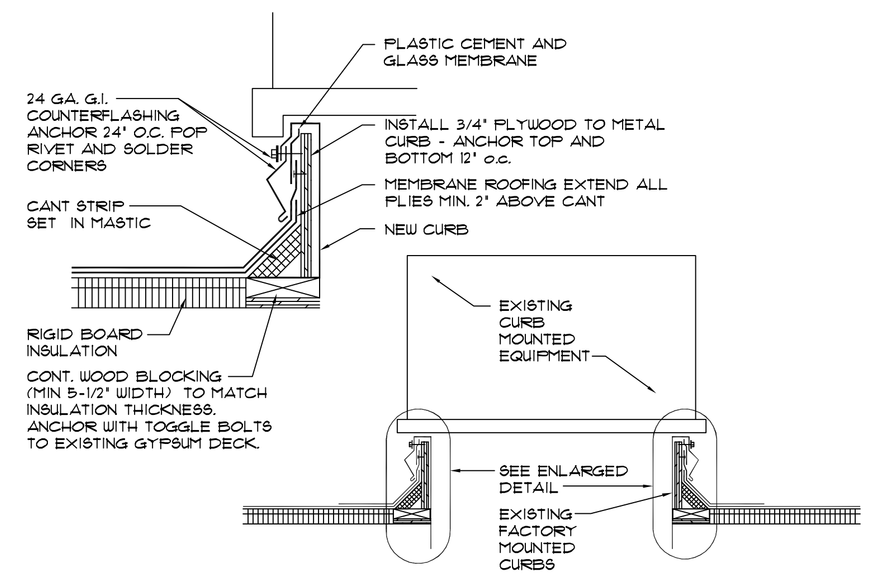

9 NEW CURB AT EXISTING UNIT
N.T.S.

13-050_R2.4.dwg

ROOFTECH
8151 Broadway, ste 109-B
San Antonio, TX. 78209
Ph: (210) 832-9917

1944 Handley Drive
Fort Worth, TX. 76112
Ph: (817) 496-4631

* Architects * Engineers * Roof Consultants

Carrollton Justice Center / Fire Training Center
2025 E. Jackson Road 2301 N. Josey Lane
Carrollton, Texas 75006 Carrollton, Texas 75006

Bobby Ballard Pump Station
4750 N. Josey Lane
Carrollton, Texas 75010

REGISTERED ARCHITECT CINDY L. CHADWELL STATE OF TEXAS

THE SEAL APPEARING ON THIS DOCUMENT WAS AUTHORIZED BY CINDY L. CHADWELL ON 08/25/2015

Drawn By:	J.T.
Checked By:	C.L.C.
Project Number:	13-050
Issue For 100% CD Set:	08/25/2015

© 2015 ROOFTECH INC.
All Rights Reserved.
All materials embodied herein constitute an original work by the Architect; the Architect owns all copyrights herein. The viewer may not reproduce, display or distribute this work or prepare derivative works based on this work without the express written consent of the copyright owner.

Revision	Date

Sheet: R2.4
OF 11 SHEETS