ROOF REPLACEMENT

Gravley Center

1111 West Beltline
Carrollton, Texas 75006

CARROLLTON
TEXAS

City of Carrollton
1945 E. Jackson Road
Carrollton, Texas 75006

INDEX OF DRAWINGS

SHEET	SHEET NAME
CS	COVER SHEET AND GENERAL NOTES
R1.1	ROOF PLAN
R2.0	DETAILS
R2.1	DETAILS
R2.2	DETAILS
R2.3	DETAILS

LEGEND (UNLESS OTHERWISE NOTED)

- PLUMBING VENT
- GAS VENT
- MISCELLANEOUS PENETRATION
- O.F. OVERFLOW DRAIN
- EXISTING ROOF DRAIN - WITH SUMP
- MULTIPLE PENETRATION
- CURB MOUNTED VENT
- PLATFORM CURB
- DUCT CURB
- HVAC UNIT
- ANTENNA
- LADDER
- ROOF HATCH
- EXISTING SATELLITE DISH
- TYP. ELECTRICAL CONDUIT
- TYP. CONDENSATE LINE
- TYP. GAS LINE
- TYPICAL ROOF ACCESS DOOR
- T.S. TAPERED INSULATION (DIRECTION OF SLOPE)
- DECK SLOPE SLOPE IN DECK

NOTE: ALL PENETRATIONS ARE APPROXIMATE IN SIZE AND LOCATIONS TO USED AS REFERENCE POINTS ONLY.

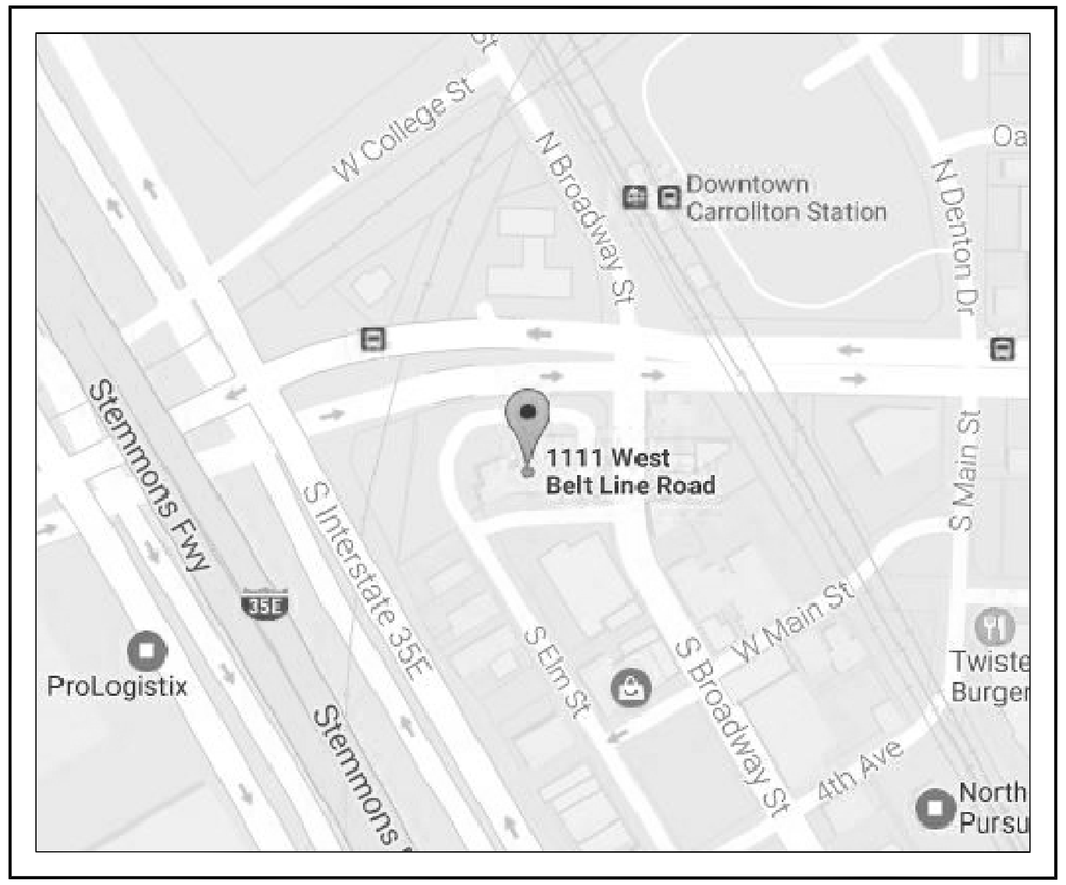

TRUE NORTH

ABBREVIATION LIST

ADH	ADHESIVE
AFF	ABOVE FINISH FLOOR
AL	ALUMINUM
ASP	ASPHALT
BF	BASE FLASHING
BURA	BUILT-UP-ROOF ASPHALT
BURC	BUILT-UP-ROOF COAL TAR PITCH
CA	COLD APPLIED
CAN	CANOPY
CI	CAST IRON
CL	CENTER LINE
CMU	CONCRETE MASONRY UNIT
COM	COMPOSITE
CONC	CONCRETE
CTP	COAL TAR PITCH
COP	COPPER
DE	DRIP EDGE
DEMO	DEMOLITION
DIA	DIAMETER
DIM	DIMENSION
DN	DOWN
DS	DOWNSPOUT
DTL	DETAIL
DWG	DRAWING
EA	EACH
EF	EXHAUST FAN
EQ	EQUAL
EQUIP	EQUIPMENT
ED	EDGE
EJ	EXPANSION JOINT
EPDM	ETHYLENE PROPYLENE DIENE MONOMER
EXH	EXHAUST
EXIST	EXISTING
FBG	FIBERGLASS
FEL	FELT
FIN	FINISH, FINISHED
FG	FOAM GLASS
FLSHG	FLASHING
FT	FOOT, FEET
GA	GAUGE
GALV	GALVANIZED
GR	GRAVEL
GRAN	GRANULES
GS	GRAVEL STOP
GU	GUTTER
GV	GRAVITY VENTS
HM	HOLLOW METAL
HV	HOT MOPPED
HS	HOT STACK
HVAC	HEATING, VENTILATING, AIR CONDITIONER
IN	INCHES
ISO	POLYISOCYANURATE
ISP	ISOCYANURATE AND PERLITE
INSUL	INSULATION, INSULATED, INSULATE
LF	LINEAR FEET
LIF	LIGHTWEIGHT INSULATION FILL
LL	LOOSE LAID
LTL	LINTEL
LOC	LOCATION
MATL	MATERIAL
MAS	MASONRY
MB	MODIFIED BITUMEN
MF	MECHANICAL FASTENER
MTL	METAL
MAX	MAXIMUM
MIN	MINIMUM
MISC	MISCELLANEOUS
MTD	MOUNT, MOUNTED, MOUNTING
N/A	NOT APPLICABLE
NIC	NOT IN CONTRACT
NTS	NOT TO SCALE
OC	ON CENTER
OPP	OPPOSITE
OR	ORGANIC
OVL	OVERLAY ROOF
PAR	PARAPET
PERL	PERLITE
PRE	PRE-FINISHED
PGM	PAINT GRIP GALVANIZED METAL
PIB	POLYISOBUTYLENE
RIP	POURED-IN-PLACE
PP	PITCH PAN
PPG	PRE-PAINTED GALVANIZED
PUF	POLYURETHANE FOAM
PVC	POLYVINYL CHLORIDE
RC	RIDGE CAP
RD	ROOF DRAIN
RH	ROOF HATCH
SF	SQUARE FEET
SH	SHINGLES
SIM	SIMILAR
SK	SKYLIGHT
SL	SLATE
SS	STAINLESS STEEL
SSM	STANDING SEAM METAL
STL	STEEL
STRUCT	STRUCTURAL
SC	SCUPPER
SV	SOIL VENT
TBR	TO BE REMOVED
TRTD	TREATED
TYP	TYPICAL
UR	URETHANE
V	VENTS
WP	WOOD
+	PLUS OR MINUS

GENERAL NOTES

A. ALL FLASHINGS AND DETAILS SHALL CONFORM TO THE SPECIFICATIONS AND THE DETAILS PROVIDED IN THESE DRAWINGS. UPON COMPLETION OF THE WORK, ALL PENETRATIONS, EQUIPMENT MOUNTS, ETC. SHALL BE EXAMINED TO VERIFY COMPLIANCE TO THESE DOCUMENTS.

B. ALL FLASHINGS SHALL BE PROPERLY TERMINATED. THE MEMBRANE FLASHINGS SHALL BE PROTECTED BY AN APPROPRIATE COUNTER FLASHING WHICH COVERS THE TOP OF THE MEMBRANE BY A MINIMUM OF 2". ALL OF THE COUNTER FLASHINGS SHALL BE PROPERLY TERMINATED SO THAT THERE ARE NO EXPOSED EDGES.

C. ALL FLASHINGS SHALL BE CONTINUOUS AT ALL CORNERS AND TRANSITIONS. THE ENDS OF THE COUNTER FLASHINGS SHALL BE EXTENDED A MINIMUM OF 2" BEYOND THE TERMINATION OF THE MEMBRANE FLASHING, AND THE EXPOSED END SHALL BE APPROPRIATELY HEMMED AND SEALED AS REQUIRED. MITERED AND SOLDERED TERMINATIONS, TRANSITIONS, AND CORNERS SHALL BE USED SO AS TO PROVIDE A CONTINUOUS FLASHING SYSTEM INCLUDING BOTH THE SHEET METAL COUNTER FLASHING AND MEMBRANE BASE FLASHING.

D. FIELD VERIFY ALL DIMENSIONS AND CONDITIONS. THE CONTRACTOR SHALL COMPLETELY FAMILIARIZE HIMSELF WITH ALL THE CONDITIONS. THE CONTRACT SHALL BE FOR A COMPLETE AND SERVICEABLE REROOFING PROJECT WITH ALL DETAILS AND WORK IN COMPLIANCE WITH REQUIREMENTS OF THE PRIMARY ROOFING MANUFACTURER, THE NATIONAL ROOFING CONTRACTOR'S ASSOCIATION (NRCA), THE SHEET METAL AND AIR CONDITIONING CONTRACTOR'S NATIONAL ASSOCIATION (SMACNA) AND THESE CONTRACT DOCUMENTS. SOME DETAILS MAY NOT BE SHOWN ON/IN THE DOCUMENTS, BUT ALL DETAILS MUST CONFORM TO THE REQUIREMENTS OF THESE DOCUMENTS.

E. ALL EQUIPMENT SHALL BE RAISED SO AS TO MEET THE MINIMUM EIGHT INCH (8") CURB HEIGHT REQUIREMENT. ALL DISCONNECTING AND RECONNECTING OF EQUIPMENT AND PIPING SHALL BE DONE IN ACCORDANCE WITH THE REQUIREMENTS OF THESE DOCUMENTS.

F. ALL ROOF TOP CONDUIT/PIPING SHALL BE RAISED SO AS TO PROVIDE A MINIMUM SIX INCH (0'-6") CLEARANCE FROM TOP OF ROOF. DISCONNECTING AND RECONNECTING OF CONDUIT/PIPING SHALL BE DONE IN ACCORDANCE WITH THE REQUIREMENTS OF THESE DOCUMENTS.

G. CONTRACTOR SHALL PROVIDE ALL NEW VENTS, LEADS, AND FLASHINGS UNLESS OTHERWISE DESIGNATED AS EXISTING. IT SHOULD BE NOTED THAT SOME PENETRATIONS, FLASHINGS, SCUPPERS OR ROOF MOUNTED EQUIPMENT AND DETAILS MAY NOT BE SHOWN ON THE DRAWINGS.

H. INCLUDE NEW WOOD BLOCKING WHERE INDICATED ON THE DRAWINGS. WOOD BLOCKING SHALL BE ANCHORED SECURELY AND IN ACCORDANCE WITH THE PERFORMANCE REQUIREMENTS AND SHALL HAVE A MINIMUM 100 PLF PULLOUT RESISTANCE. ALL WOOD NAILERS SHOWN ON THE DRAWING SHALL BE INCLUDED IN THE BASE BID.

I. USE FACTORY TAPERED CANT STRIP AND INSULATION WHERE SHOWN IN THE DRAWINGS. FIELD TAPERING INSULATION SHALL NOT BE ACCEPTABLE. ALL CRICKETS SHALL BE INSTALLED SO THAT THERE IS POSITIVE DRAINAGE INTO THE DRAINS. CRICKETS SHALL HAVE A NET SLOPE OF 1/4" OR AS SHOWN ON THE DRAWINGS. IT SHOULD BE NOTED THAT DRAINS ARE OFTEN OFFSET FROM THE LOW POINT OF THE ROOF AND THE CRICKETS MUST COMPENSATE FOR THOSE DIFFERENCES.

J. ALL MATERIALS ARE TO BE CONSIDERED NEW EXCEPT WHERE DESIGNATED AS EXISTING.

K. REFER TO DETAIL 8/R2.0 FOR STANDARD SHEET METAL ENGAGEMENT DETAILS.

L. REFER TO DETAIL 7/R2.0 FOR STANDARD COPING REQUIREMENTS.

LOCATION MAP NOT TO SCALE

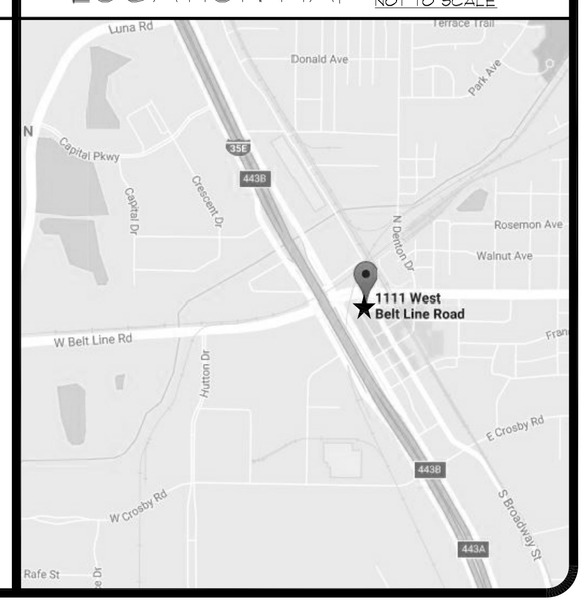

ROOFTECH
15229 Pebble Falls
San Antonio, TX. 78232
Ph: (210) 832-9917
1944 Handley Drive
Fort Worth, TX. 76112
Ph: (817) 490-4631
* Architects * Engineers * Roof Consultants

Gravley Center
1111 West Beltline
Carrollton, Texas 75006

REGISTERED ARCHITECT CINDY L. CHADWELL STATE OF TEXAS

THE SEAL APPEARING ON THIS DOCUMENT WAS AUTHORIZED BY CINDY L. CHADWELL ON 05/02/17.

Drawn By:	rlw
Checked By:	clc
Project Number:	17-004
Issue 100% CD's:	05/02/17

© 2017 ROOFTECH INC.
All Rights Reserved.
All materials embodied herein constitute an original work by the Architect; the Architect owns all copyrights herein. The viewer may not reproduce, display or distribute this work or prepare derivative works based on this work without the express written consent of the copyright owner.

Revision	Date

Sheet: CS
OF 6 SHEETS

LEGEND (UNLESS OTHERWISE NOTED)

- PLUMBING VENT (REFER TO DETAIL 1/R2.3)
- GAS VENT (REFER TO DETAIL 2/R2.3)
- MISCELLANEOUS PENETRATION (REFER TO DETAIL 4/R2.3)
- O.F. OVERFLOW DRAIN (REFER TO DETAIL 3/R2.1)
- EXISTING ROOF DRAIN - WITH SUMP (REFER TO DETAIL 2/R2.1)
- MULTIPLE PENETRATION (REFER TO DETAIL 3/R2.3)
- CURB MOUNTED VENT (REFER TO DETAIL 7/R2.2)
- PLATFORM CURB (REFER TO DETAIL 5/R2.2)
- HVAC UNIT (REFER TO DETAIL 4/R2.2)
- EXISTING LADDER (REFER TO NOTE 2)
- ROOF HATCH (REFER TO DETAIL 8/R2.2)
- EXISTING SATELLITE DISH (REFER TO NOTE 7)
- WALKPADS (REFER TO DETAIL 6/R2.3)
- —E—E—E— TYP. ELECTRICAL CONDUIT (REFER TO DETAIL 7/R2.3)
- —CD— TYP. CONDENSATE LINE (REFER TO DETAIL 9/R2.3)
- —GAS— TYP. GAS LINE (REFER TO DETAIL 8/R2.3)
- TYPICAL ROOF ACCESS DOOR.
- T.S. TAPERED INSULATION (DIRECTION OF SLOPE)
- DECK SLOPE SLOPE IN DECK

NOTE: ALL PENETRATIONS ARE APPROXIMATE IN SIZE AND LOCATIONS TO USED AS REFERENCE POINTS ONLY.

KEY NOTES

1. INSTALL WALL CRICKETS BETWEEN ROOF DRAINS. REFER TO DETAIL 1/R2.1.
2. EXISTING LADDER TO REMAIN.
3. INSTALL CRICKET BETWEEN ROOF DRAIN AND WALL. REFER TO DETAIL 1/R2.1.
4. INSTALL CRICKET BEHIND ALL EQUIPMENT CURBS PER DETAIL 3/R2.0. NOT ALL ARE SHOWN FOR CLARITY.
5. INSTALL WALK PADS ACCORDING TO MANUFACTURER'S RECOMMENDATIONS IN PATH AS SHOWN ON THE DRAWINGS. REFER TO 6/R2.3
6. COMPLETELY REMOVE ALL DEBRIS FROM ROOF DRAIN AND DRAIN PIPE TO ALLOW FOR PROPER DRAINAGE.
7. DISCONNECT SATELLITE DISH. TEMPORARILY RELOCATE AS REQUIRED IN ORDER TO REPLACE ROOFING. PRESERVE AND PROTECT AND RETURN TO SAME LOCATION AFTER REROOFING IS COMPLETE. COORDINATE REMOVAL AND REPLACEMENT WITH OWNER. OWNER SHALL BE RESPONSIBLE FOR REALIGNMENT.
8. SUPPORT ALL GAS LINES PER DETAIL 8/R2.3. ALL LINES NOT SHOWN FOR CLARITY. THE ENTIRE GAS LINE SYSTEM ON THE BUILDING MUST BE PRESSURE TESTED AS SET FORTH IN THE APPLICABLE CODE. CONTRACTOR MUST PROVIDE A LEAK TEST CERTIFICATION AT COMPLETION OF THE PROJECT. CLEAN, PRIME, AND PAINT ALL GAS LINES YELLOW. PAINT ALL VERTICAL LINES TO MATCH BUILDING EXTERIOR. LINES NOT SHOWN FOR CLARITY.
9. SECURE VERTICAL PIPES TO WALL.
10. SUPPORT ALL CONDENSATE LINES PER DETAIL 9/R2.3.
11. SUPPORT ALL ELECTRICAL CONDUIT PER DETAIL 7/R2.3.
12. FULLY ADHERE TPO TO VERTICAL FACE BELOW STONE PEDIMENT.
13. THE CRICKET BETWEEN THESE DRAINS MUST BE GREATER THAN 1/2 INCH / FT SLOPE TO ACCOMMODATE LOW SPOT (FIELD VERIFY)
14. DASHED LINE INDICATES FULLY TAPERED INSULATION SYSTEM ON THIS ROOF AREA.

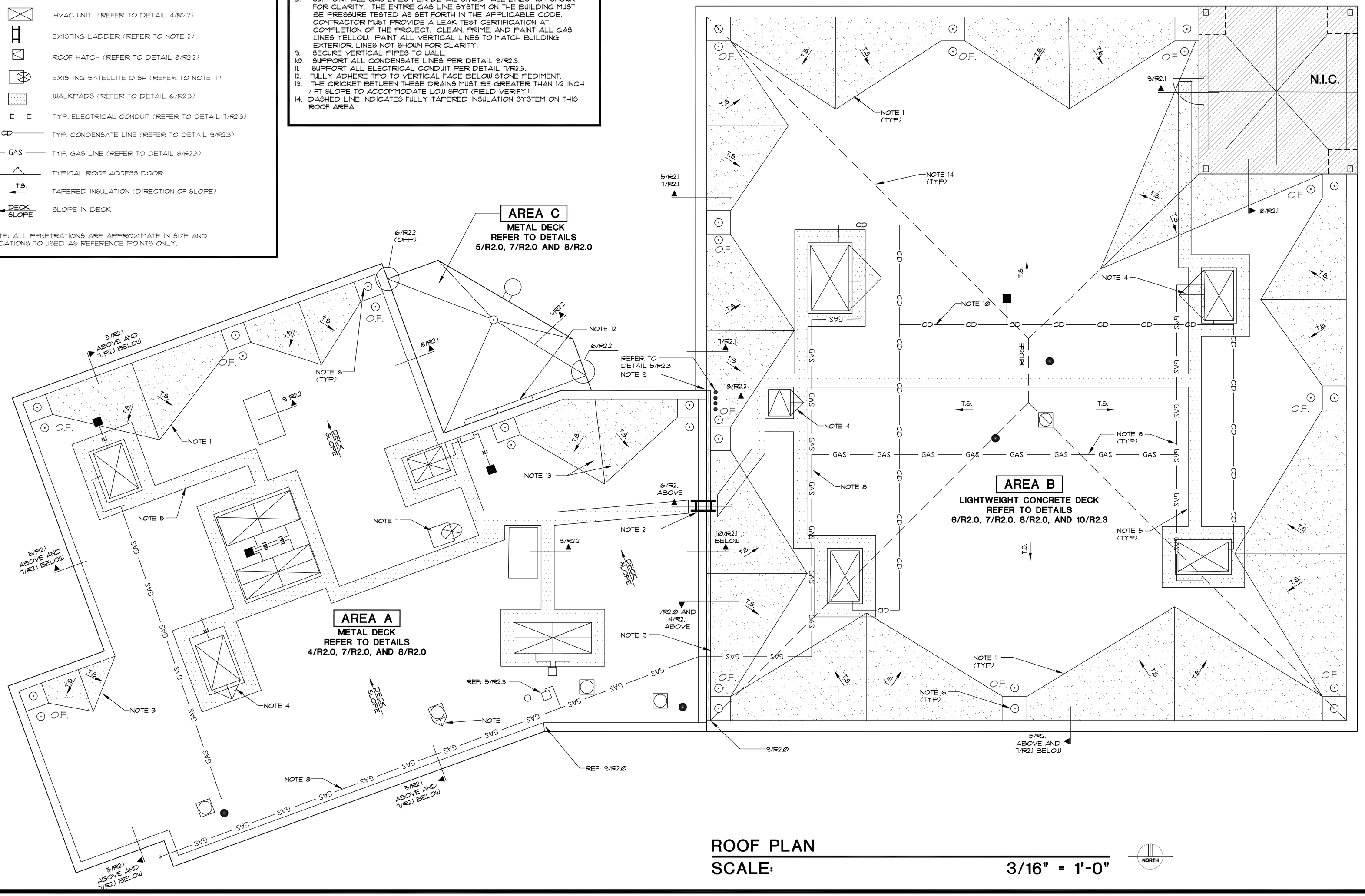

ROOF PLAN

SCALE: 3/16" = 1'-0"

NORTH

ROOFTECH
15229 Pebble Falls
San Antonio, TX. 78232
Ph: (210) 832-9917

1944 Handley Drive
Fort Worth, TX. 76112
Ph: (817) 490-4631

* Architects * Engineers * Roof Consultants

Gravley Center
1111 West Beltline
Carrollton, Texas 75006

REGISTERED ARCHITECT CINDY L. CHADWELL STATE OF TEXAS

THE SEAL APPEARING ON THIS DOCUMENT WAS AUTHORIZED BY CINDY L. CHADWELL ON 05/02/17.

Drawn By:	rlw
Checked By:	clc
Project Number:	17-004
Issue 100% CD's:	05/02/17

© 2017 ROOFTECH INC.
All Rights Reserved.
All materials embodied herein constitute an original work by the Architect; the Architect owns all copyrights herein. The viewer may not reproduce, display or distribute this work or prepare derivative works based on this work without the express written consent of the copyright owner.

Revision	Date

Sheet: R1.0

OF 6 SHEETS

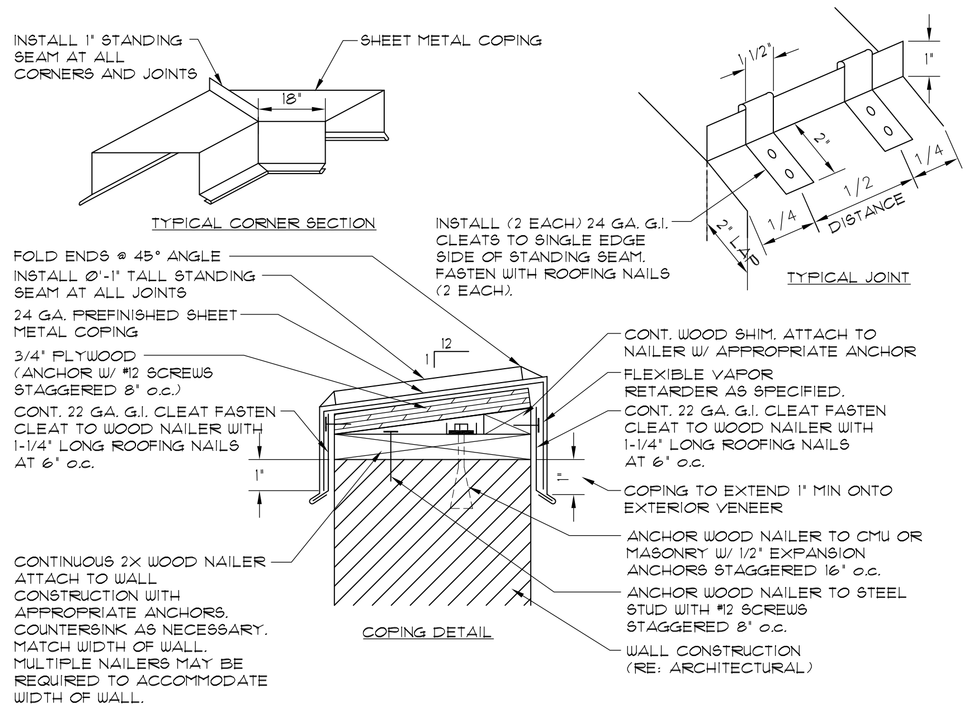

1 STANDARD METAL COPING REQUIREMENTS

N.T.S.

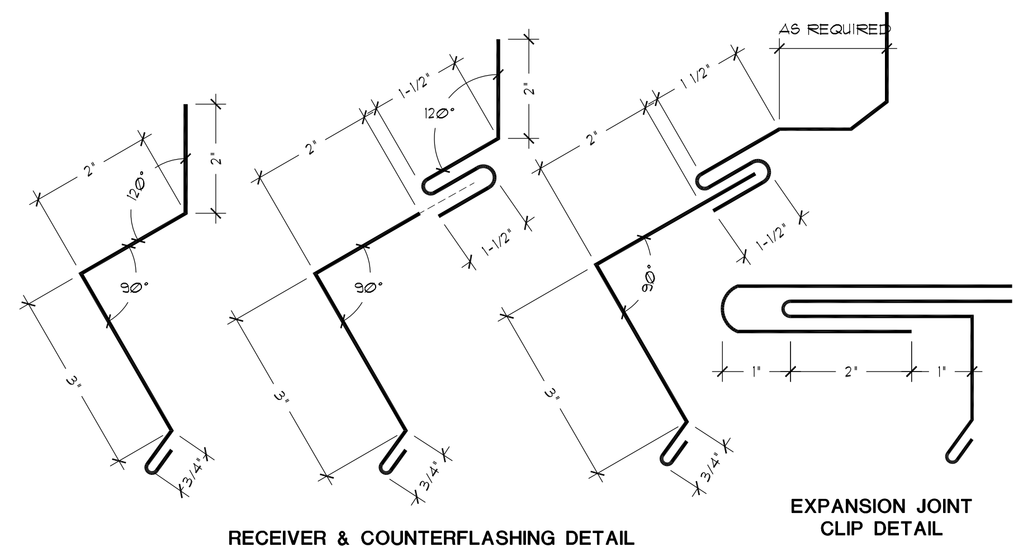

2 STANDARD SHEET METAL ENGAGEMENT DETAILS

N.T.S.

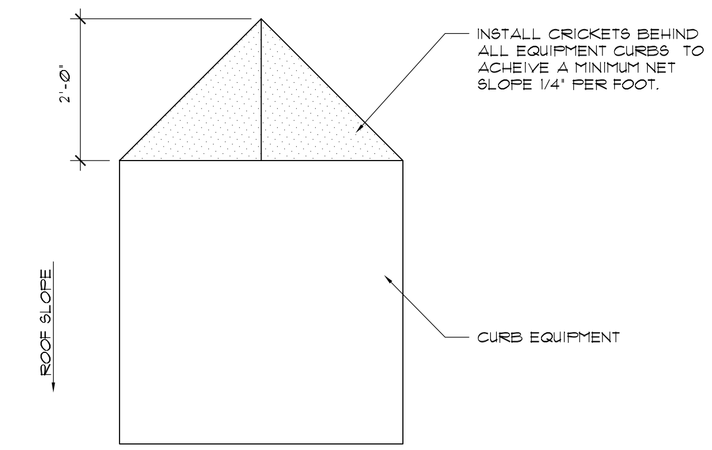

3 TYPICAL CRICKET AT EQUIPMENT CURB

N.T.S.

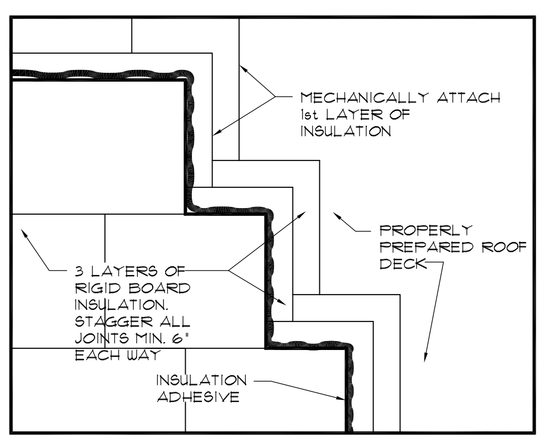

4 INSULATION ATTACHMENT

FIRST LAYER: 4.5" POLYISOCYANURATE (2-LAYERS)
SECOND LAYER: 1/2" ROOF COVER BOARD

N.T.S.

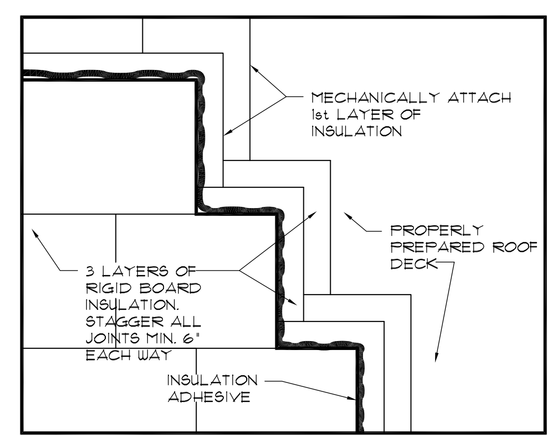

5 INSULATION ATTACHMENT

FIRST LAYER: 1/4" / FT TAPERED POLYISOCYANURATE
SECOND LAYER: 1/2" ROOF COVER BOARD

N.T.S.

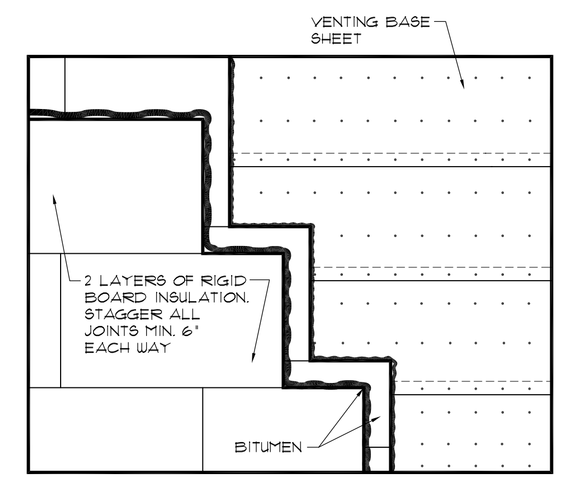

6 INSULATION ATTACHMENT

FIRST LAYER: 4.5" POLYISOCYANURATE (2-LAYERS)
SECOND LAYER: 1/4" / FT. TAPERED POLYISOCYANURATE
THIRD LAYER: 1/2" ROOF COVER BOARD

N.T.S.

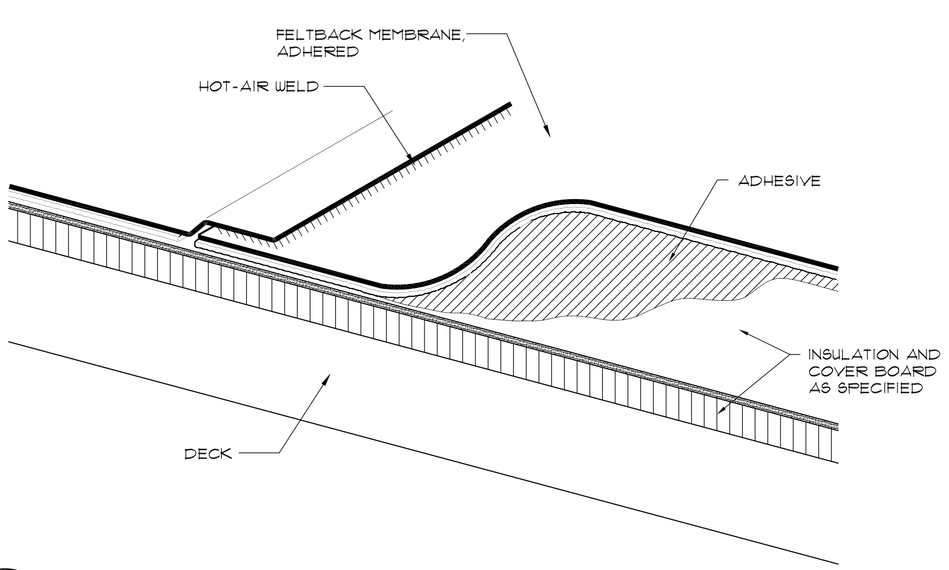

7 FELTBACK ADHERED MEMBRANE

N.T.S.

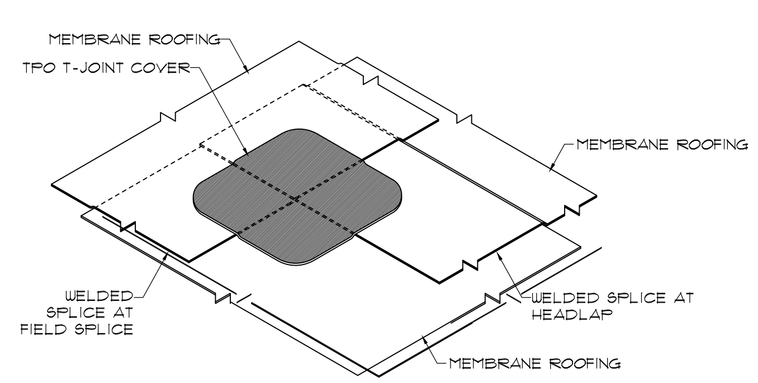

8 LAP SPLICE DETAIL

N.T.S.

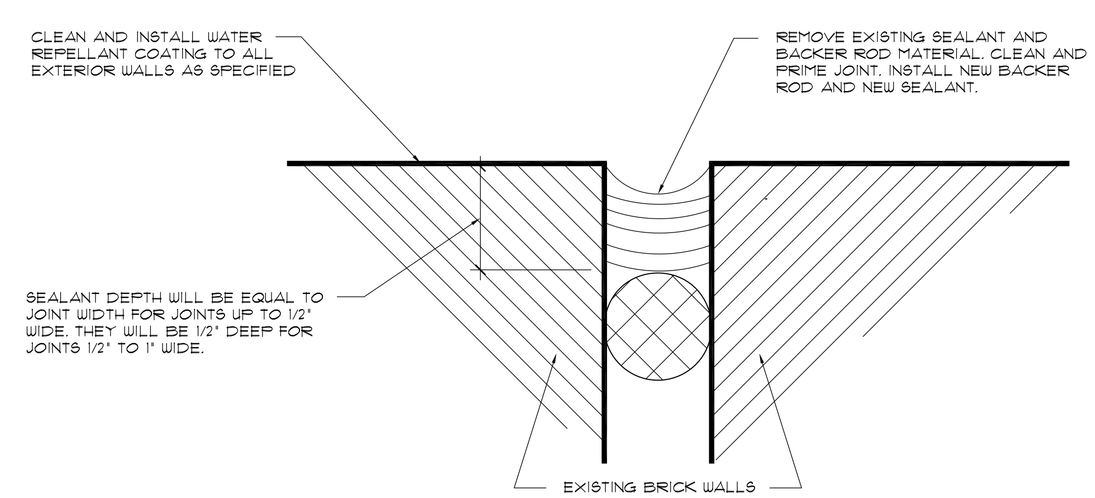

9 JOINT DETAIL

N.T.S.

ROOFTECH
15229 Pebble Falls
San Antonio, TX. 78232
Ph: (210) 832-9917
1944 Handley Drive
Fort Worth, TX. 76112
Ph: (817) 490-4631
* Architects * Engineers * Roof Consultants

Gravley Center
1111 West Beltline
Carrollton, Texas 75006

REGISTERED ARCHITECT CINDY L. CHADWELL STATE OF TEXAS

THE SEAL APPEARING ON THIS DOCUMENT WAS AUTHORIZED BY CINDY L. CHADWELL ON 05/02/17.

Drawn By:	rlw
Checked By:	clc
Project Number:	17-004
Issue 100% CD's:	05/02/17

© 2017 ROOFTECH INC.
All Rights Reserved.
All materials embodied herein constitute an original work by the Architect; the Architect owns all copyrights herein. The viewer may not reproduce, display or distribute this work or prepare derivative works based on this work without the express written consent of the copyright owner.

Revision	Date

Sheet: R2.0

OF 6 SHEETS

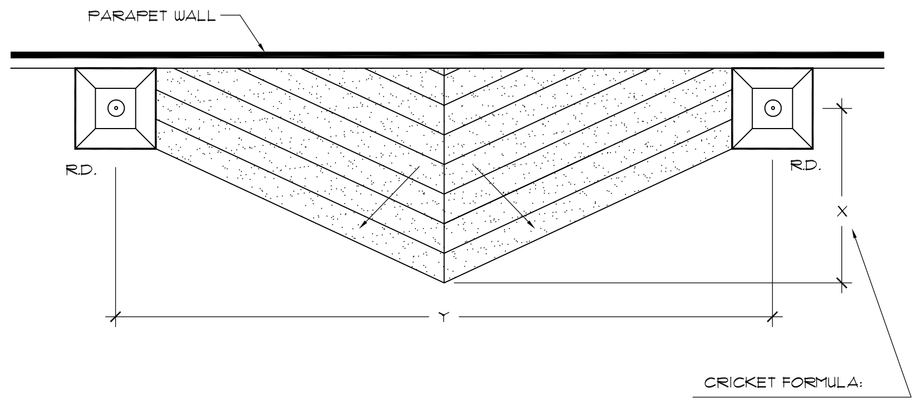

NOTE: CRICKETS SHOULD ACHIEVE A NET SLOPE OF 1/4" PER FOOT

1 WALL CRICKETS
N.T.S.

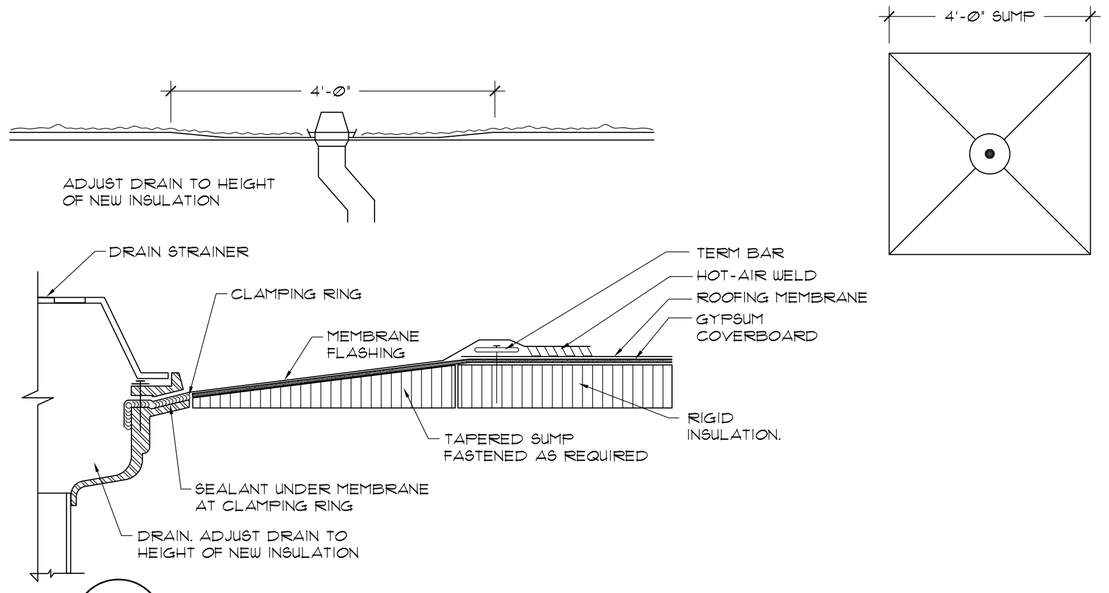

2 ROOF DRAIN DETAIL
N.T.S.

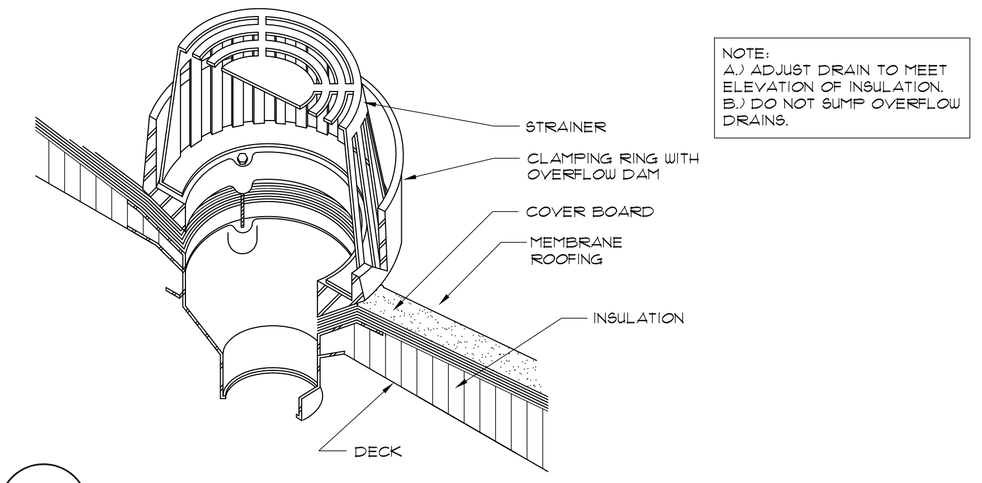

NOTE:
A.) ADJUST DRAIN TO MEET ELEVATION OF INSULATION.
B.) DO NOT SUMP OVERFLOW DRAINS.

3 OVERFLOW DRAIN DETAIL
N.T.S.

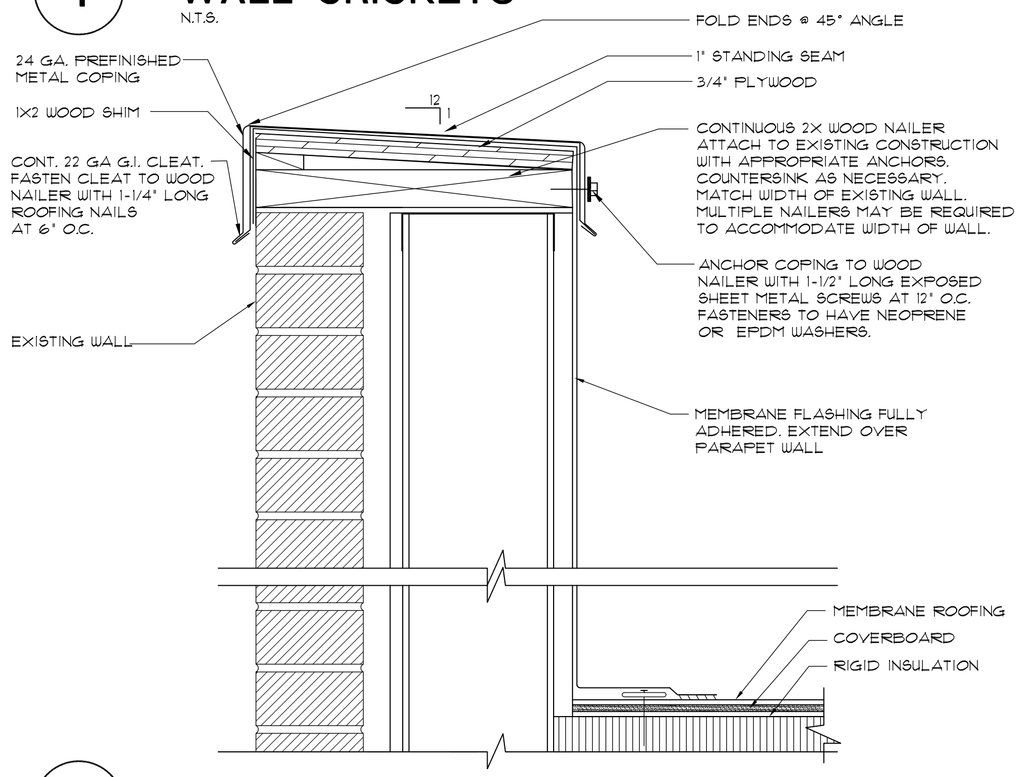

4 PARAPET WALL DETAIL
N.T.S.

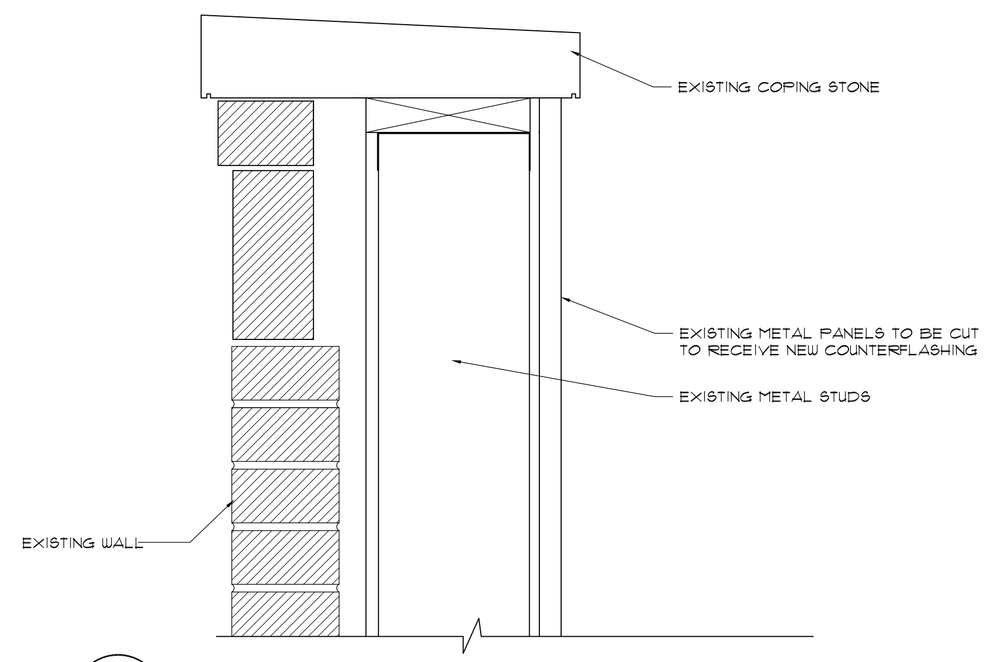

5 PARAPET WALL DETAIL
N.T.S.

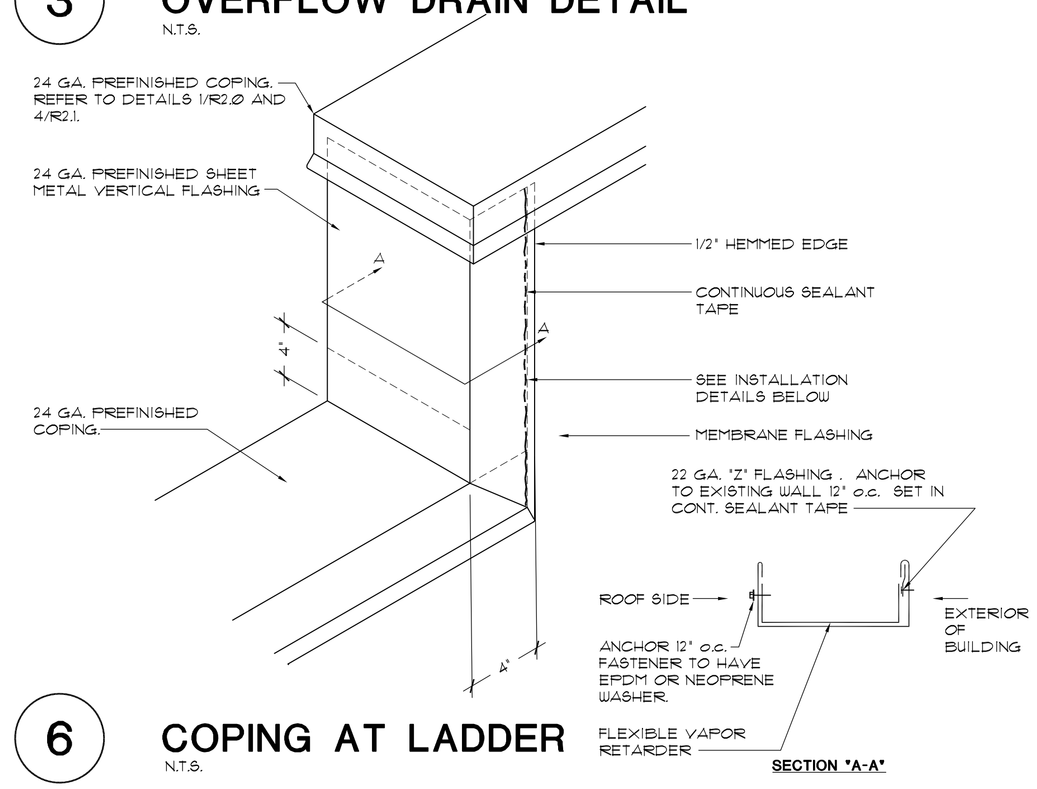

6 COPING AT LADDER
N.T.S.

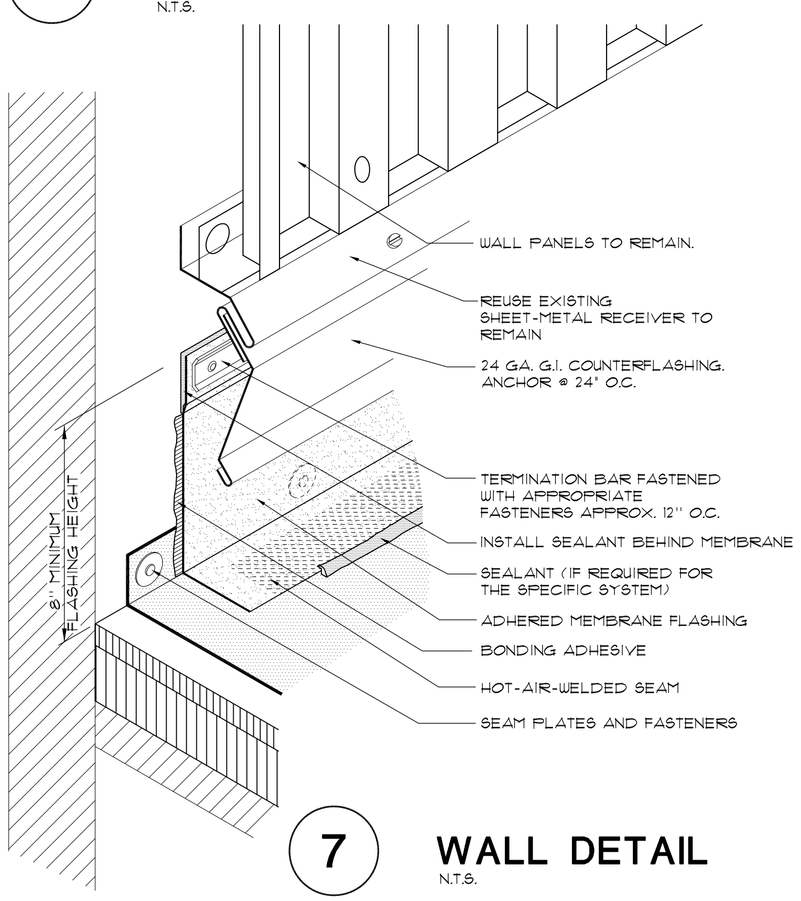

7 WALL DETAIL
N.T.S.

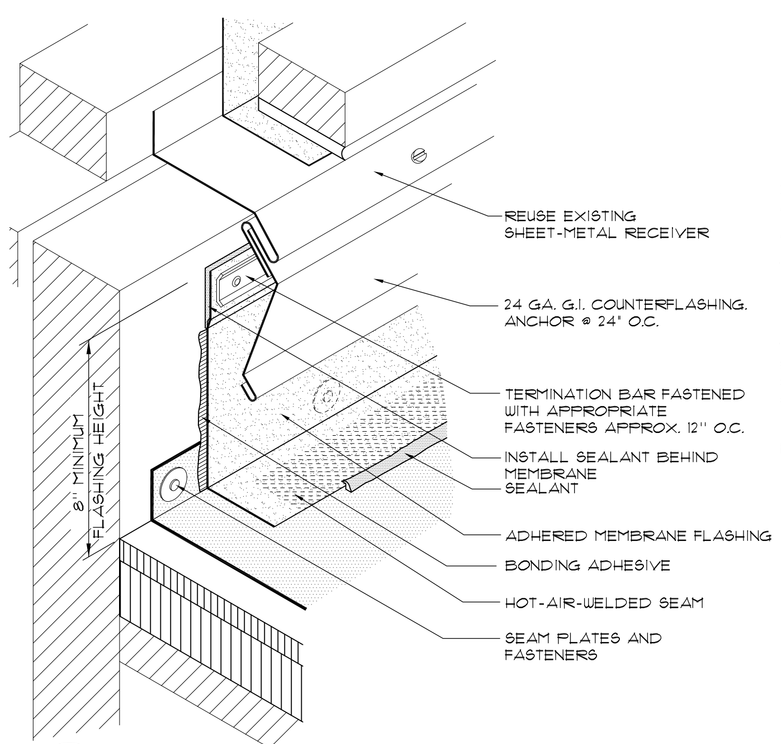

8 WALL DETAIL
N.T.S.

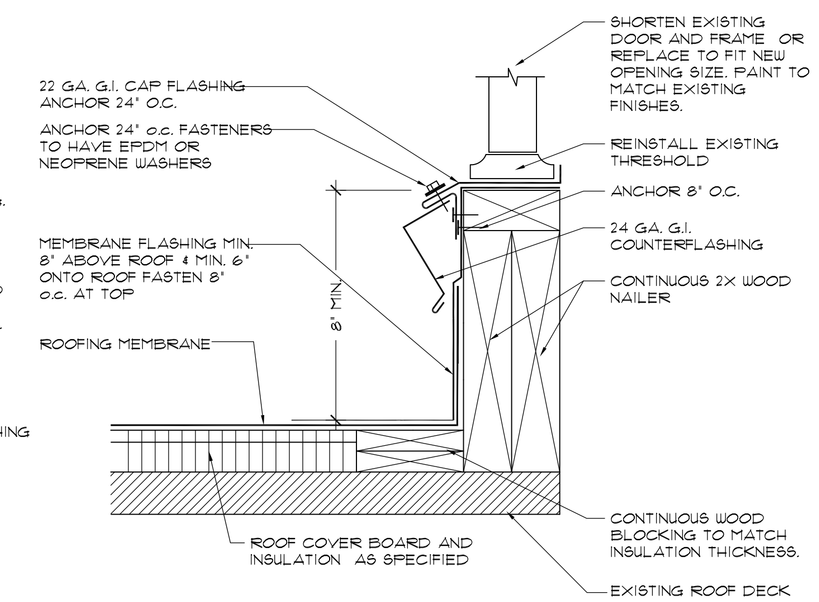

9 DOOR DETAIL
N.T.S.

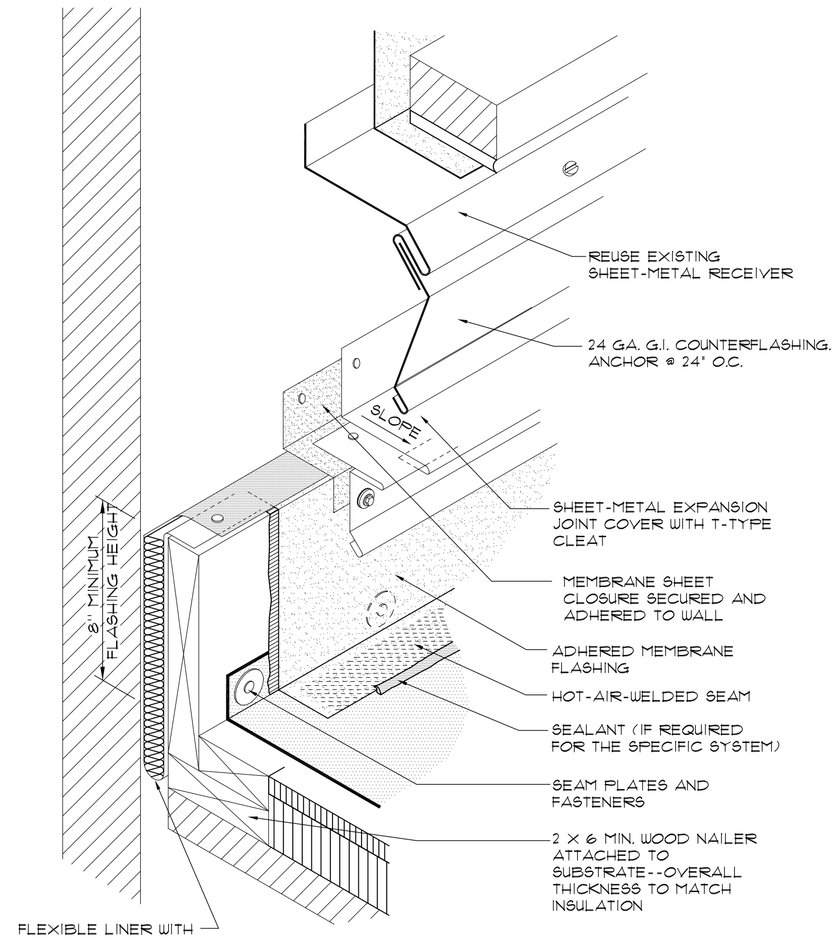

10 EXPANSION JOINT DETAIL
N.T.S.

ROOFTECH
1944 Handley Drive
Fort Worth, TX. 76112
Ph: (817) 496-4631
15229 Pebble Falls
San Antonio, TX. 78232
Ph: (210) 832-9917
* Architects * Engineers * Roof Consultants

Gravley Center
1111 West Beltline
Carrollton, Texas 75006

REGISTERED ARCHITECT CINDY L. CHADWELL STATE OF TEXAS

THE SEAL APPEARING ON THIS DOCUMENT WAS AUTHORIZED BY CINDY L. CHADWELL ON 05/02/17.

Drawn By:	rlw
Checked By:	clc
Project Number:	17-004
Issue 100% CD's:	05/02/17

© 2017 ROOFTECH INC.
All Rights Reserved.
All materials embodied herein constitute an original work by the Architect; the Architect owns all copyrights herein. The viewer may not reproduce, display or distribute this work or prepare derivative works based on this work without the express written consent of the copyright owner.

Revision	Date

Sheet: R2.1
OF 6 SHEETS

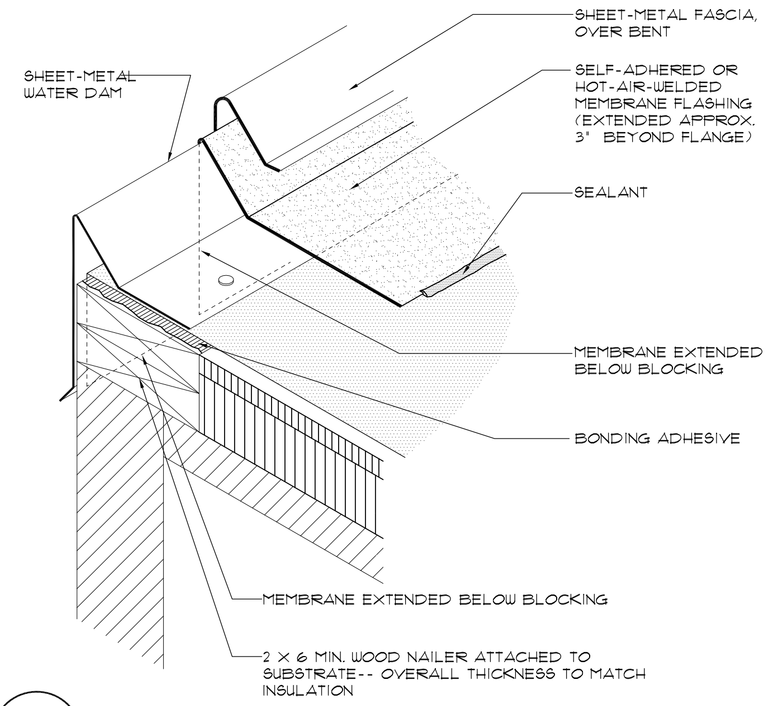

1 EDGE DETAIL
N.T.S.

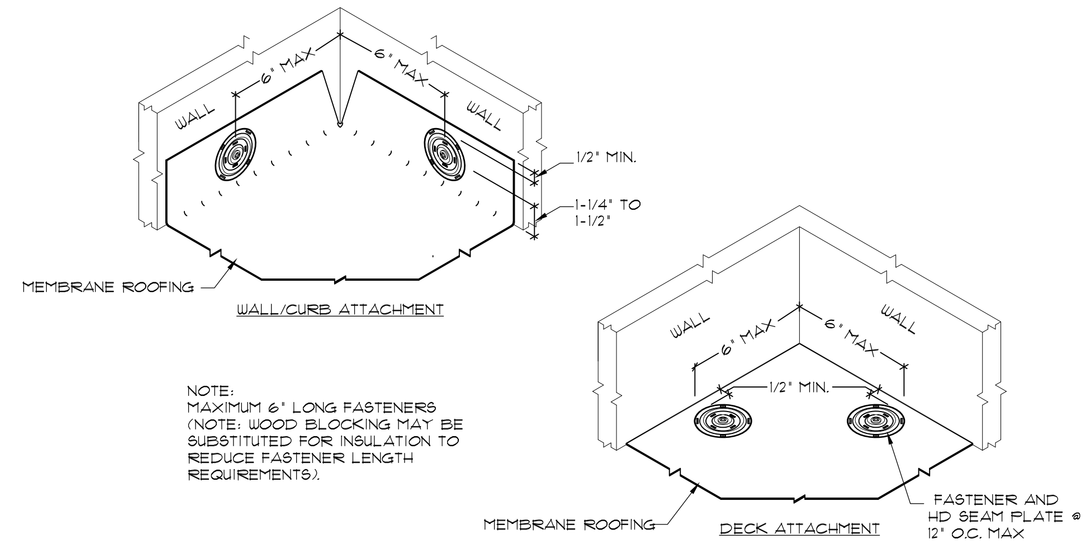

NOTE:
MAXIMUM 6' LONG FASTENERS
(NOTE: WOOD BLOCKING MAY BE SUBSTITUTED FOR INSULATION TO REDUCE FASTENER LENGTH REQUIREMENTS).

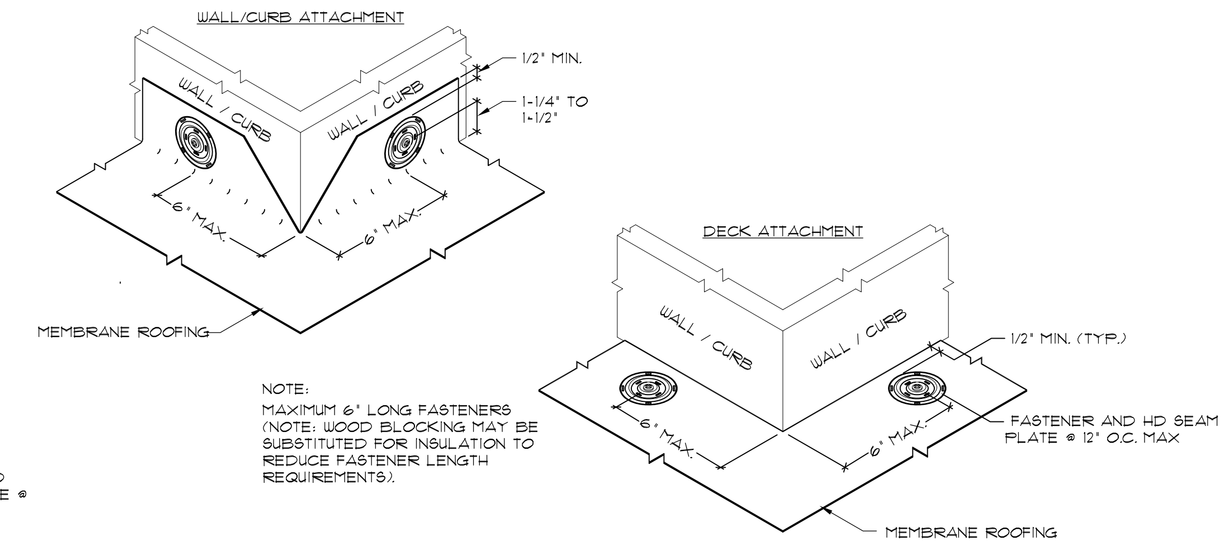

NOTE:
MAXIMUM 6' LONG FASTENERS
(NOTE: WOOD BLOCKING MAY BE SUBSTITUTED FOR INSULATION TO REDUCE FASTENER LENGTH REQUIREMENTS).

2 TYPICAL INSIDE CORNER DETAIL
N.T.S.

3 TYPICAL OUTSIDE CORNER DETAIL
N.T.S.

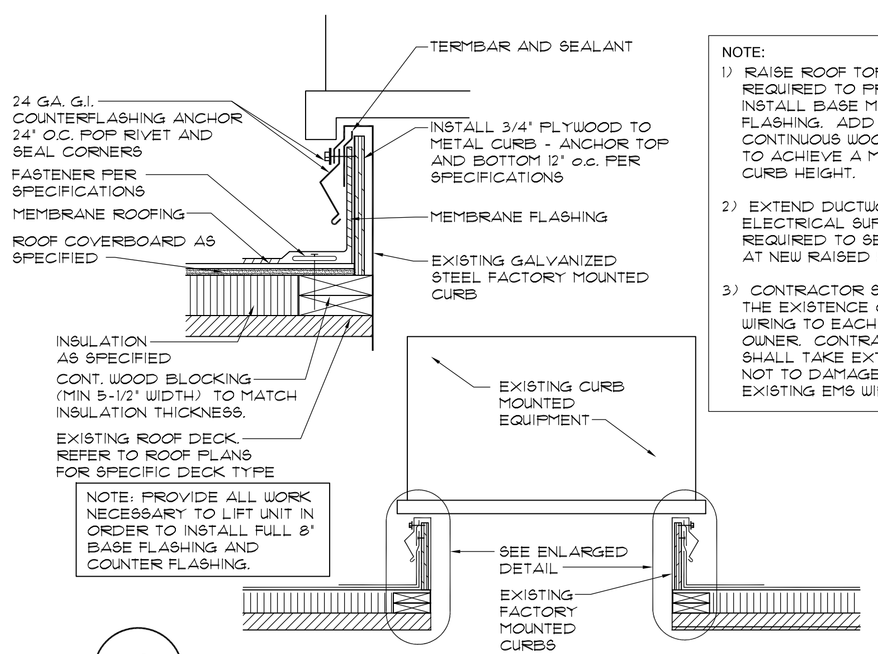

NOTE: PROVIDE ALL WORK NECESSARY TO LIFT UNIT IN ORDER TO INSTALL FULL 8" BASE FLASHING AND COUNTER FLASHING.

NOTE:
1) RAISE ROOF TOP UNIT AS REQUIRED TO PROPERLY INSTALL BASE MEMBRANE FLASHING. ADD NEW CONTINUOUS WOOD BLOCKING TO ACHIEVE A MIN. 8" ABOVE CURB HEIGHT.

2) EXTEND DUCTWORK AND ELECTRICAL SUPPLY AS REQUIRED TO SERVICE UNIT AT NEW RAISED HEIGHT.

3) CONTRACTOR SHALL VERIFY THE EXISTENCE OF ANY EMS WIRING TO EACH UNIT WITH OWNER. CONTRACTOR SHALL TAKE EXTREME CARE NOT TO DAMAGE ANY EXISTING EMS WIRING.

4 HVAC CURB
N.T.S.

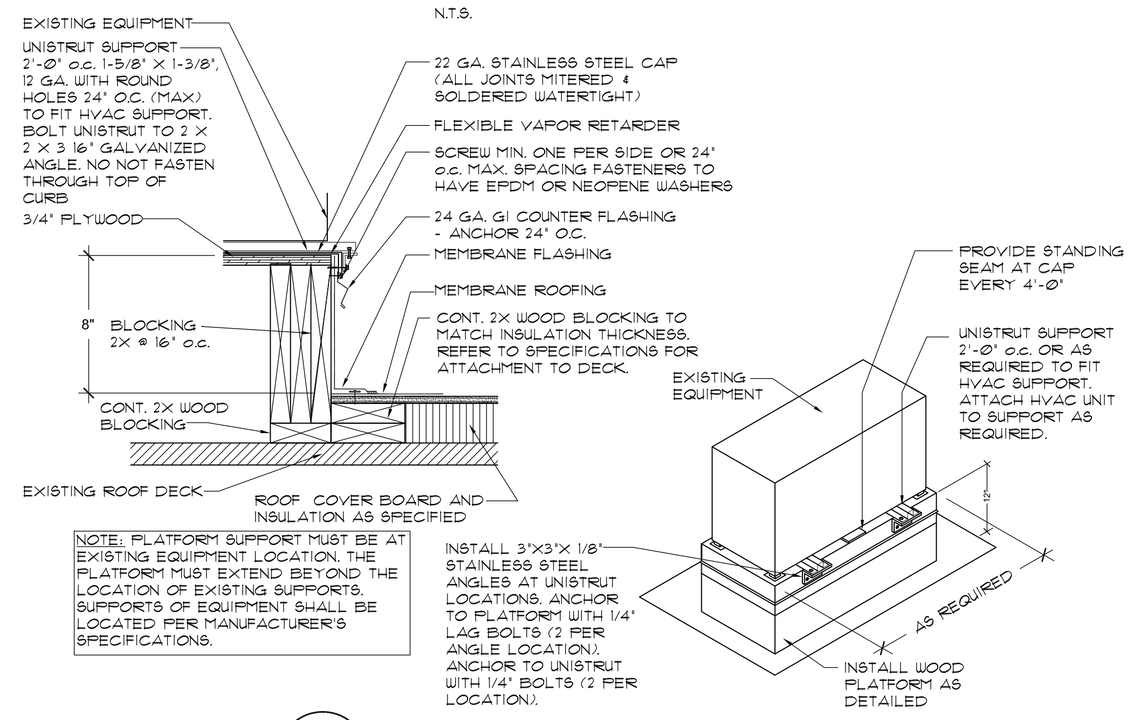

NOTE: PLATFORM SUPPORT MUST BE AT EXISTING EQUIPMENT LOCATION. THE PLATFORM MUST EXTEND BEYOND THE LOCATION OF EXISTING SUPPORTS. SUPPORTS OF EQUIPMENT SHALL BE LOCATED PER MANUFACTURER'S SPECIFICATIONS.

5 PLATFORM CURB
N.T.S.

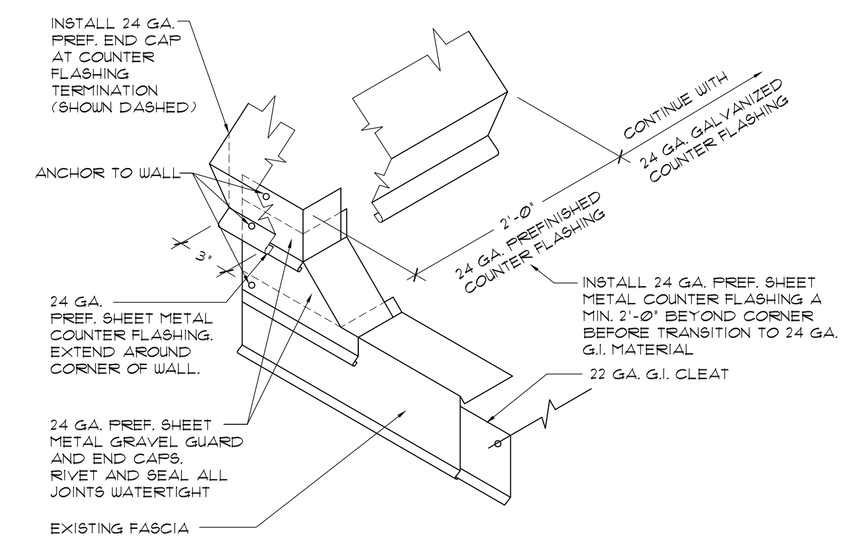

6 GRAVEL GUARD TERMINATION AT WALL
N.T.S.

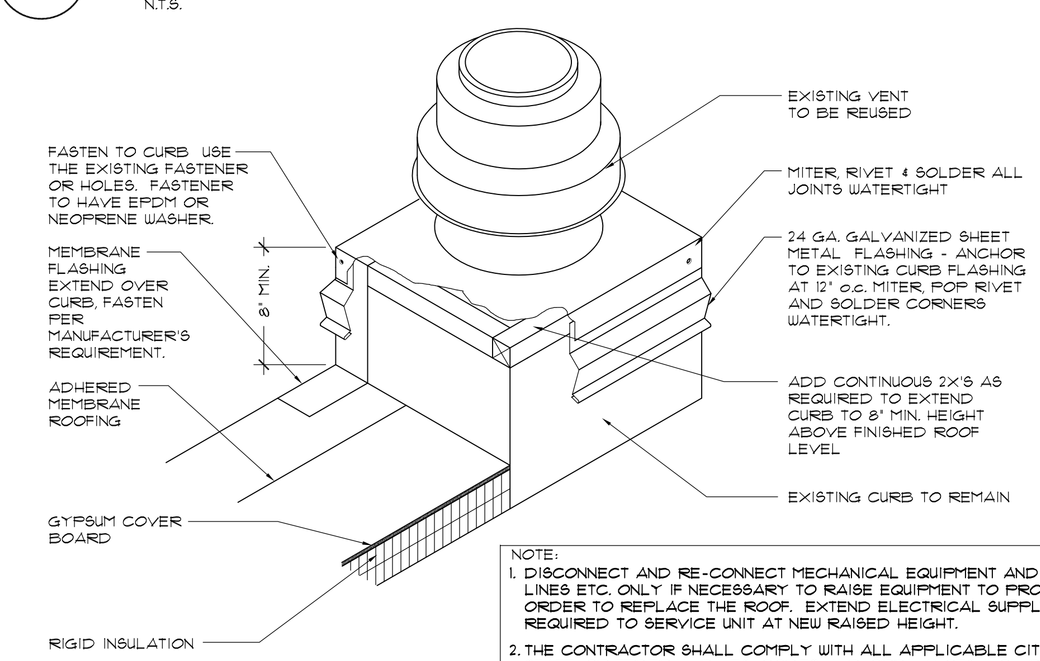

NOTE:
1. DISCONNECT AND RE-CONNECT MECHANICAL EQUIPMENT AND ELECTRICAL LINES, ETC. ONLY IF NECESSARY TO RAISE EQUIPMENT TO PROPER HEIGHT IN ORDER TO REPLACE THE ROOF. EXTEND ELECTRICAL SUPPLY IF REQUIRED TO SERVICE UNIT AT NEW RAISED HEIGHT.
2. THE CONTRACTOR SHALL COMPLY WITH ALL APPLICABLE CITY, COUNTY, STATE, OR FEDERAL RULES, CODES AND ORDINANCES INCLUDING BUT NOT LIMITED TO THE NATIONAL ELECTRICAL CODE.
3. BUILDING PERMITS FROM THE CITY OF LAREDO, TEXAS ARE REQUIRED FOR ALL MECHANICAL, PLUMBING AND ELECTRICAL WORK. COPIES SHALL BE PROVIDED TO THE ARCHITECT.

7 CURB MOUNTED VENT
N.T.S.

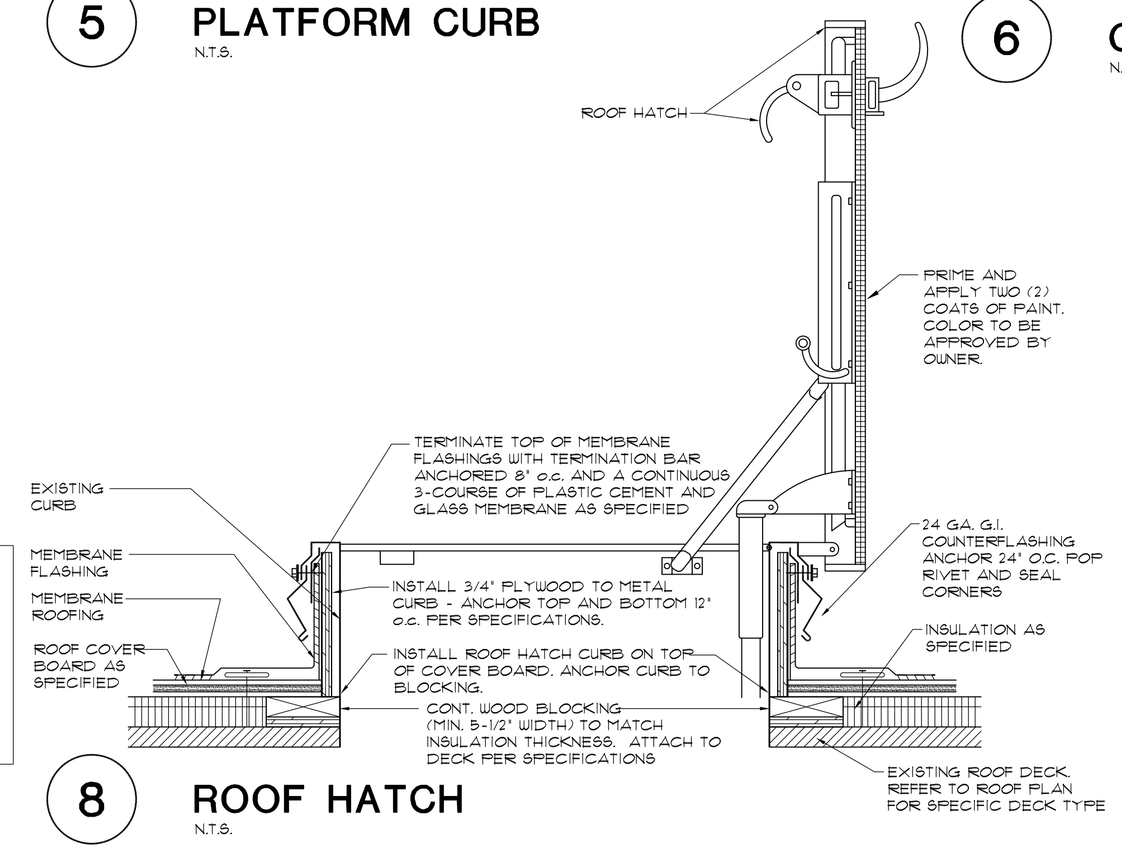

8 ROOF HATCH
N.T.S.

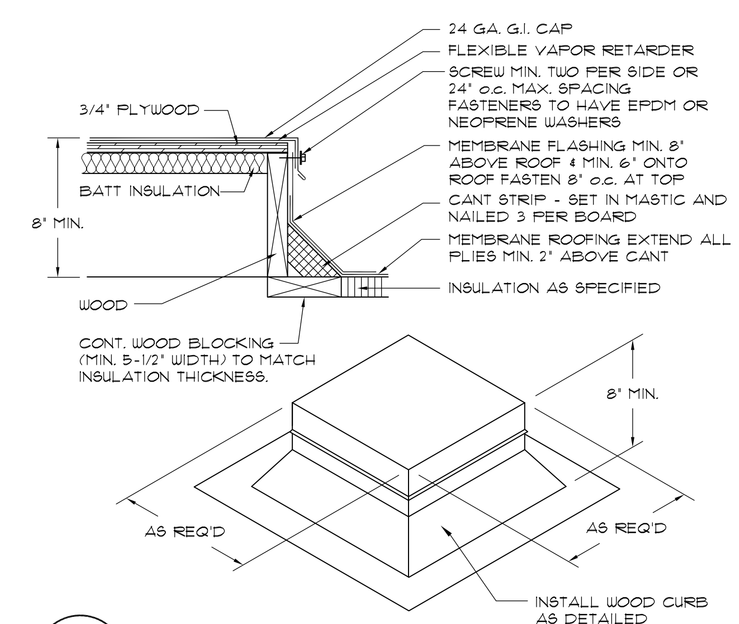

9 CAP FLASHING
N.T.S.

ROOFTECH
15229 Pebble Falls
San Antonio, TX. 78232
Ph: (210) 832-9917

1944 Handley Drive
Fort Worth, TX. 76112
Ph: (817) 496-4631

* Architects * Engineers * Roof Consultants

Gravley Center
1111 West Beltline
Carrollton, Texas 75006

REGISTERED ARCHITECT CINDY L. CHADWELL STATE OF TEXAS

THE SEAL APPEARING ON THIS DOCUMENT WAS AUTHORIZED BY CINDY L. CHADWELL ON 05/02/17.

Drawn By:	rlw
Checked By:	clc
Project Number:	17-004
Issue 100% CD's:	05/02/17

© 2017 ROOFTECH INC.
All Rights Reserved.
All materials embodied herein constitute an original work by the Architect; the Architect owns all copyrights herein. The viewer may not reproduce, display or distribute this work or prepare derivative works based on this work without the express written consent of the copyright owner.

Revision	Date

Sheet: R2.2
OF 6 SHEETS

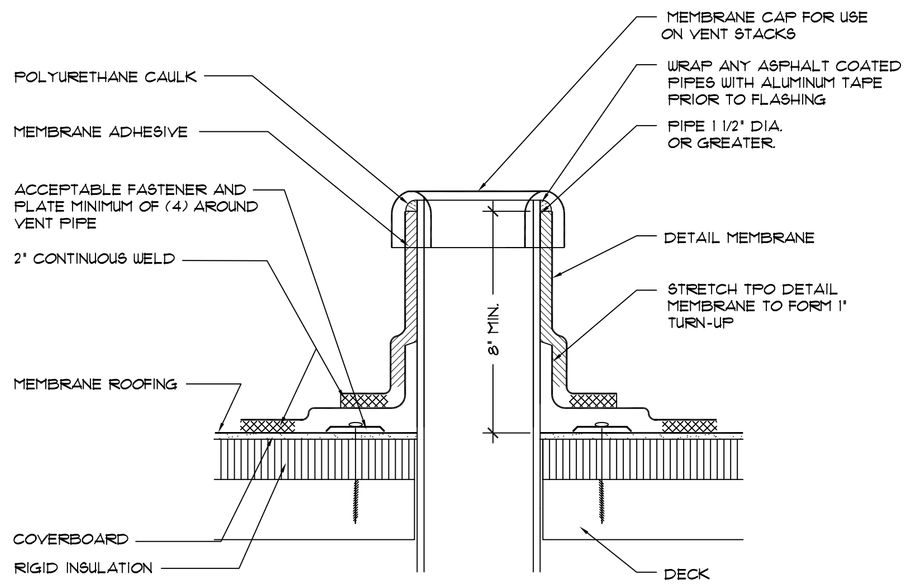

1 PLUMBING VENT FLASHING
N.T.S.

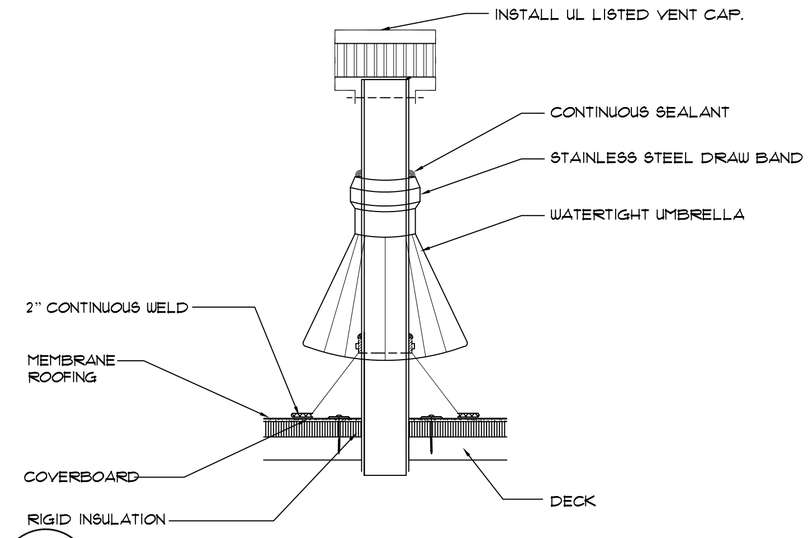

2 GAS VENT/FLUE PIPE
N.T.S.

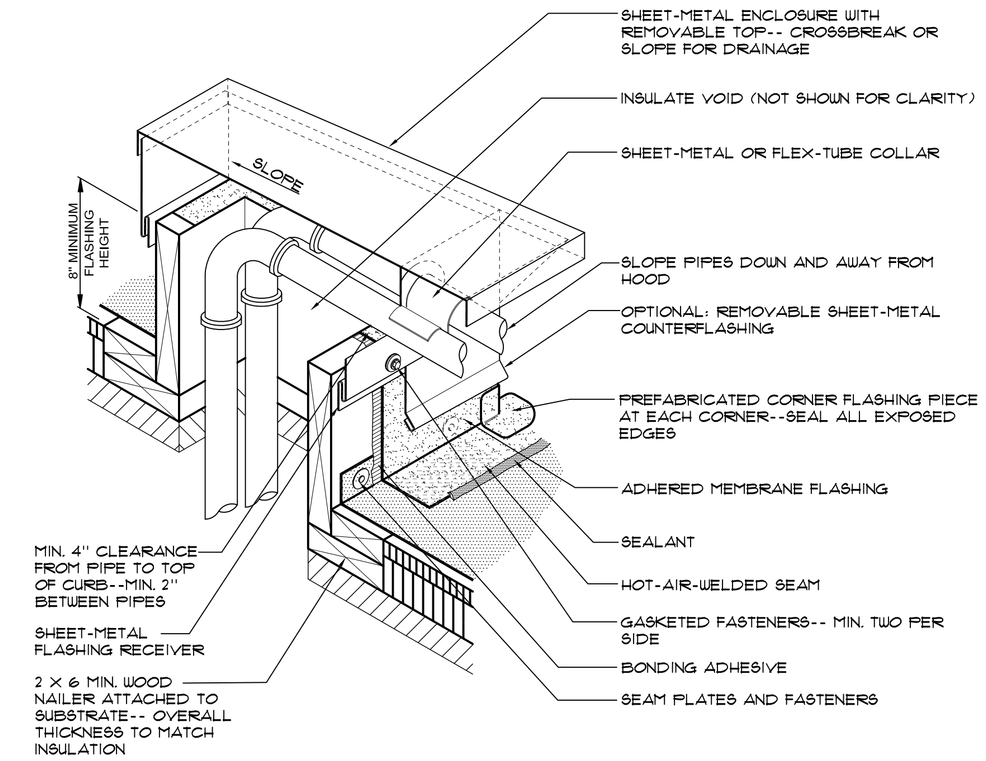

3 MULTIPLE PENETRATION
N.T.S.

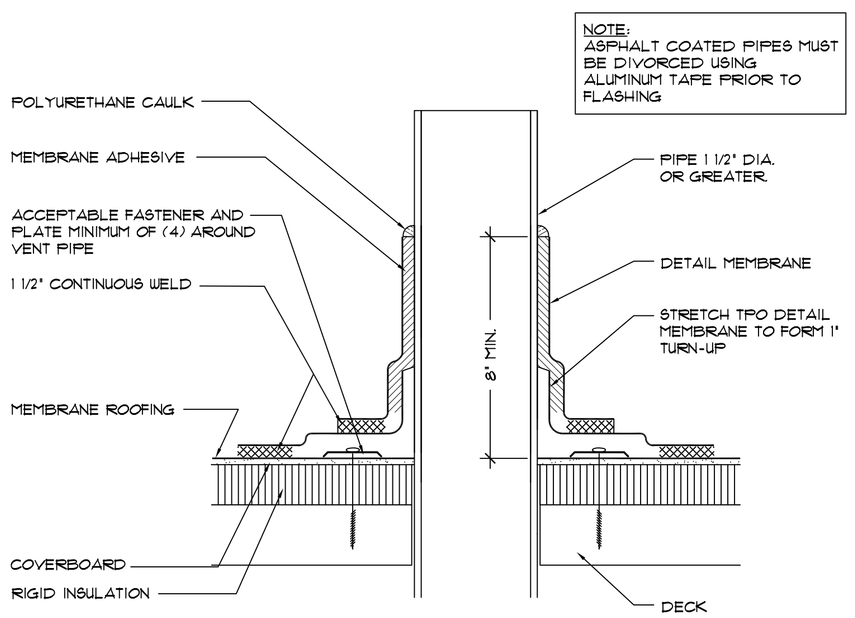

4 FIELD WRAP FLASHING
N.T.S.

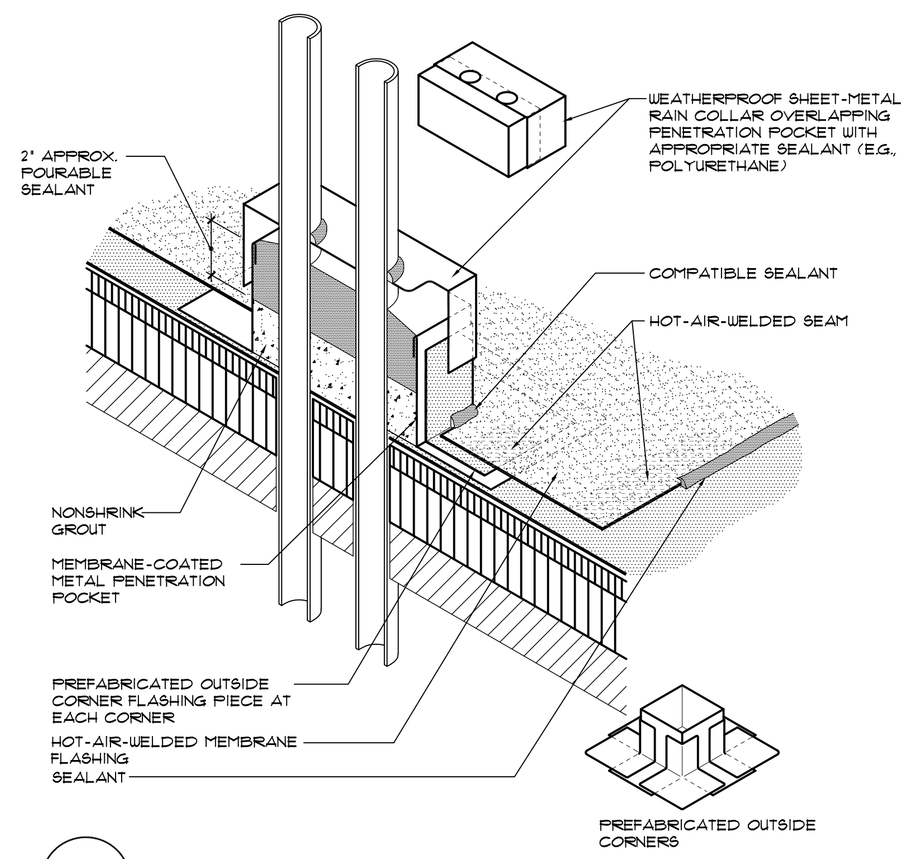

5 PENETRATION POCKET-MULTIPLE PENETRATION
N.T.S.

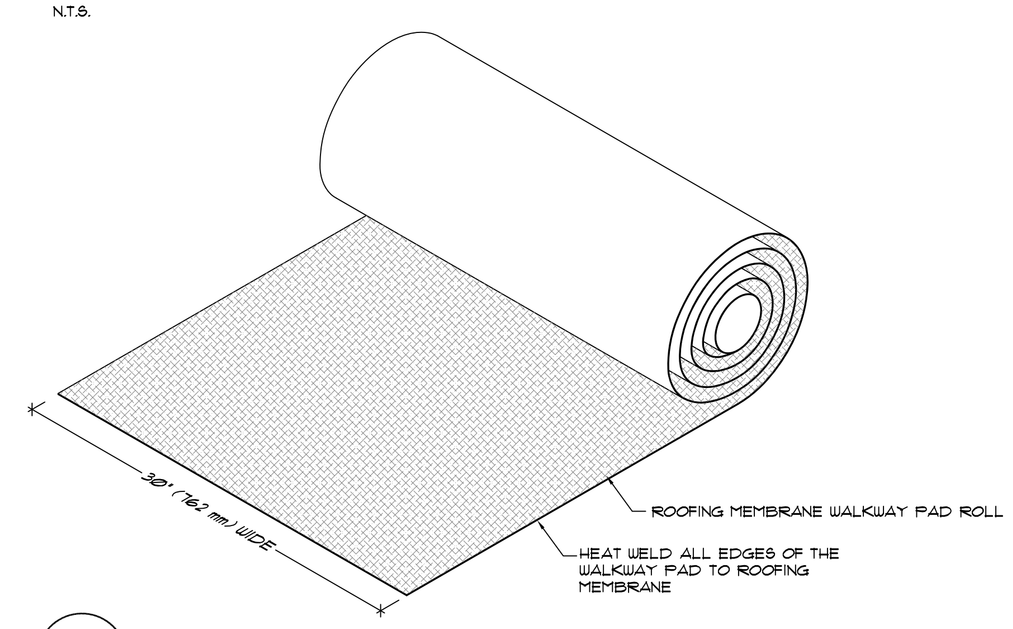

6 WALKWAY PAD DETAIL
N.T.S.

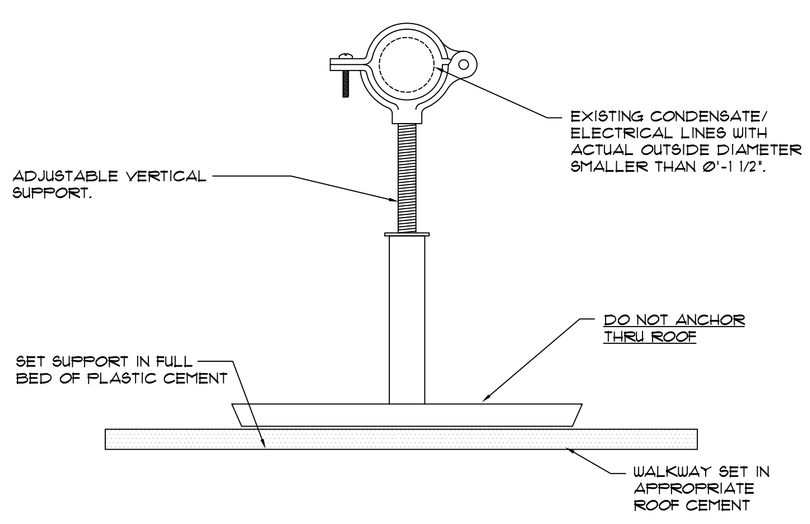

7 CONDUIT LINE SUPPORT
N.T.S.

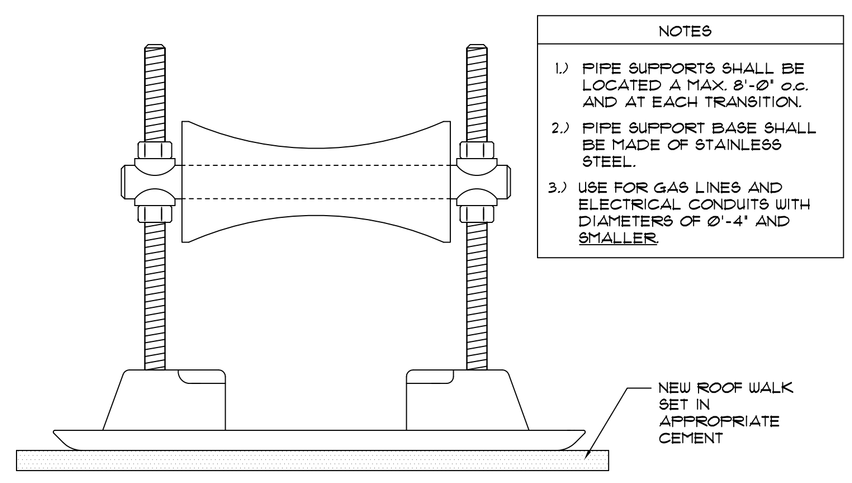

NOTES

1.) PIPE SUPPORTS SHALL BE LOCATED A MAX. 8'-0" o.c. AND AT EACH TRANSITION.

2.) PIPE SUPPORT BASE SHALL BE MADE OF STAINLESS STEEL.

3.) USE FOR GAS LINES AND ELECTRICAL CONDUITS WITH DIAMETERS OF Ø'-4" AND SMALLER.

8 TYPICAL PIPE SUPPORT
N.T.S.

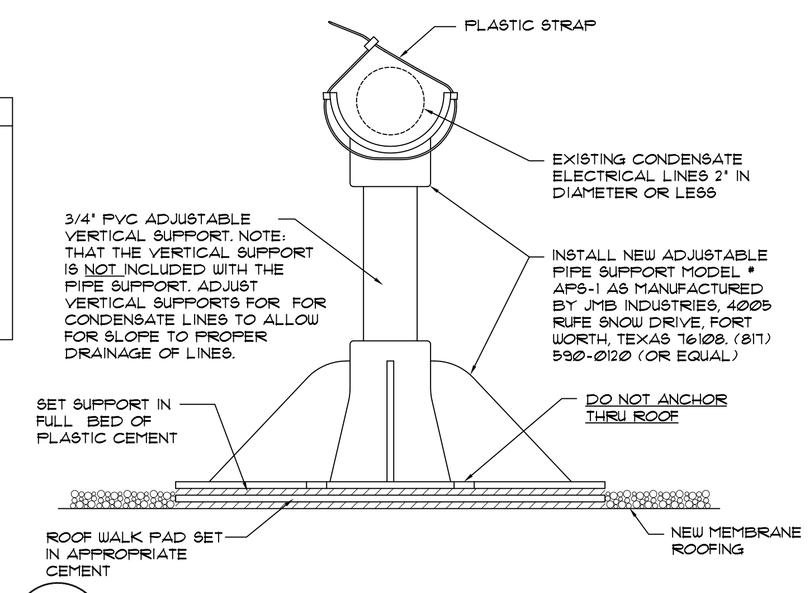

9 CONDENSATE LINE SUPPORT
N.T.S.

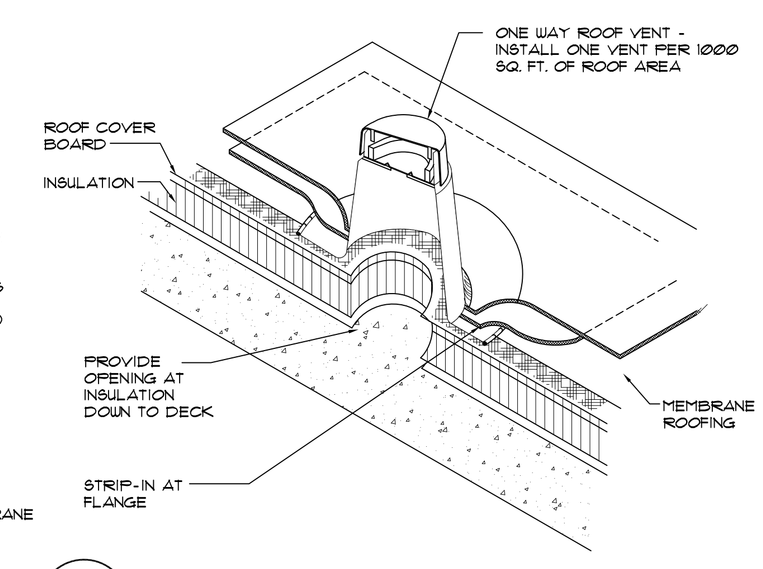

10 ONE WAY VENT DETAIL
N.T.S.

ROOFTECH
15229 Pebble Falls
San Antonio, TX. 78232
Ph: (210) 832-9917
1944 Handley Drive
Fort Worth, TX. 76112
Ph: (817) 490-4631
* Architects * Engineers * Roof Consultants

Gravley Center
1111 West Beltline
Carrollton, Texas 75006

REGISTERED ARCHITECT CINDY L. CHADWELL STATE OF TEXAS

THE SEAL APPEARING ON THIS DOCUMENT WAS AUTHORIZED BY CINDY L. CHADWELL ON 05/02/17.

Drawn By:	rlw
Checked By:	clc
Project Number:	17-004
Issue 100% CD's:	05/02/17

© 2017 ROOFTECH INC.
All Rights Reserved.
All materials embodied herein constitute an original work by the Architect; the Architect owns all copyrights herein. The viewer may not reproduce, display or distribute this work or prepare derivative works based on this work without the express written consent of the copyright owner.

Revision	Date

Sheet: R2.3
OF 6 SHEETS